# Quickie 2
## August 2025

*EIQ2X*

**Mark For:**

Date:
Dealer Acct #:
Dealer:
Dealer Contact:
Dealer Address:
Dealer City: PV: PC:
Dealer Phone: ( ) Fax: ( )
Confirmation Email:
Confirm Via: ☐ Fax ☐ Email

**Submitting for:** ☐ **Quote** ☐ **Order**

PO#:

**ADDITIONAL SHIPPING INFORMATION**

Ship To:
Attention:
Address:
Address:
Ship To City: PV: PC:
Ship To Phone: ( ) Fax: ( )

## 1. FRAME

**Base model**

| ✔ | Option # | Definition | Price |
|---|---|---|---|
| ☐ | 002WM32 | Quickie 2 | $3,245.00 |
| ☐ | 002WM109 | Quickie 2 - Transit included | $3,245.00 |

**Transit Option**

*N/A on Stroller Handles (Removable Push Handles) or Xtender*

| ✔ | Option # | Definition | Price |
|---|---|---|---|
| ☐ | 002TO46 | Transit System WC19 | NC |

**Frame Style**

| ✔ | Option # | Definition | Price |
|---|---|---|---|
| ☐ | 002FS31 | Standard Swing Away | NC |
| ☐ | 002FS30 | Hemi Swing Away | NC |

**Rear Frame Type (300 lbs. Weight Capacity)**

| ✔ | Option # | Definition | Price |
|---|---|---|---|
| ☐ | 002RS1 | Rear Side Frame Straight | NC |
| ☐ | 002RS2 | Rear Side Frame Rounded | NC |
| ☐ | 002RS3 | Depth Adjustable Back (DAB)<br>*3.0" of rearward adjustment.*<br>*N/A w/ swing-away or flip-back armrest.* | $368.00 |

**Heavy Duty Package**

| ✔ | Option # | Definition | Price |
|---|---|---|---|
| ☐ | 002HV1 | Heavy Duty (18"-24" Wide only) (350 lbs. weight capacity). Includes Reinforced Back Upholstery & Stabilizer Bar. | $1,262.00 |

## 2. SIZE / SEATING

**Frame Width**

| ✔ | Option # | Definition | Price |
|---|---|---|---|
| ☐ | 002W3 | 12" | NC |
| ☐ | 002W4 | 13" | NC |
| ☐ | 002W5 | 14" | NC |
| ☐ | 002W6 | 15" | NC |
| ☐ | 002W7 | 16" | NC |
| ☐ | 002W8 | 17" | NC |
| ☐ | 002W9 | 18" | NC |
| ☐ | 002W10 | 19" | NC |
| ☐ | 002W11 | 20" | $308.00 |
| ☐ | 002W12 | 21" *(Only Avail. w/ Heavy Duty)* | $308.00 |
| ☐ | 002W13 | 22" *(Only Avail. w/ Heavy Duty)* | $308.00 |
| ☐ | 002W57 | B4ME - 23" Width *(Heavy Duty)* | $308.00 |
| ☐ | 002W58 | B4ME - 24" Width *(Heavy Duty)* | $308.00 |

**Seat Depth**

*12" seat depth not available with Hemi frame*

| ✔ | Option # | Definition | Price |
|---|---|---|---|
| ☐ | 002SD5 | 12" | NC |
| ☐ | 002SD6 | 13" | NC |
| ☐ | 002SD7 | 14" | NC |
| ☐ | 002SD8 | 15" | NC |
| ☐ | 002SD9 | 16" | NC |
| ☐ | 002SD10 | 17" | NC |
| ☐ | 002SD11 | 18" | NC |
| ☐ | 002SD72 | 19" | $308.00 |
| ☐ | 002SD13 | 20" | $308.00 |
| ☐ | 002SD105 | B4ME - 21" Depth | $308.00 |
| ☐ | 002SD106 | B4ME - 22" Depth | $308.00 |
| ☐ | 002SD107 | B4ME - 21" Depth (*Heavy Duty*) | $308.00 |
| ☐ | 002SD108 | B4ME - 22" Depth *(Heavy Duty)* | $308.00 |

**Frame Depth**

*Seat Depth can be ordered up to 3" smaller for growth.Std frame available with 13"-22" frame Depth & HD frame available with 16"-22" frame Depth. Hemi available with 16"-18" & 20"-22" frame depth. Please refer to matrix in page 8 of Appendix for frame Depth Vs seat Depth matrix. Growth is achieved to the front of the depth.*

| ✔ | Option # | Definition | Price |
|---|---|---|---|
| ☐ | 002FD4 | 13" | NC |
| ☐ | 002FD5 | 14" | NC |
| ☐ | 002FD6 | 15" | NC |
| ☐ | 002FD7 | 16" | NC |
| ☐ | 002FD8 | 17" | NC |
| ☐ | 002FD9 | 18" | NC |
| ☐ | 002FD10 | 19" *Steel reinforced* | NC |
| ☐ | 002FD36 | 20" *Steel reinforced* | NC |
| ☐ | 002FD51 | B4ME - 21" Frame Depth | $308.00 |
| ☐ | 002FD52 | B4ME - 22" Frame Depth | $308.00 |

| ✔ | Option # | | Definition | Price | ✔ | Option # | | Definition | Price |
|---|---|---|---|---|---|---|---|---|---|

## 2. SIZE / SEATING (CONT)

### Seat Sling

| | | | | |
|---|---|---|---|---|
| ☐ | 002SL1 | | Standard Seat Sling | NC |
| ☐ | 002SL6 | | Omit Seat Sling | NC |

### JAY Cushions (Optional)

*To order any JAY cushions on-chair, please see the JAY price list.*

*Cushion name or part number must be filled out with desired width and depth*

| | | | |
|---|---|---|---|
| | | JAY Bundled Cushion | |
| ☐ | 002JC20 | Cushion Name or Part # | Price List |
| | | Width: Depth: | |

## 3. CASTERS / SEAT HEIGHT

### Front Seat Height

*Please see matrix on Page 9 for additional information. 13.5"-14" Hemi only 21.5"-22" not available in Hemi Frame*

| | | | | | | | |
|---|---|---|---|---|---|---|---|
| ☐ | 002SH40 | 13.5" | NC | ☐ | 002SH18 | 18.0" | NC |
| ☐ | 002SH41 | 14.0" | NC | ☐ | 002SH20 | 18.5" | NC |
| ☐ | 002SH42 | 14.5" | NC | ☐ | 002SH21 | 19.0" | NC |
| ☐ | 002SH12 | 15.0" | NC | ☐ | 002SH23 | 19.5" | NC |
| ☐ | 002SH13 | 15.5" | NC | ☐ | 002SH24 | 20.0" | NC |
| ☐ | 002SH14 | 16.0" | NC | ☐ | 002SH26 | 20.5" | NC |
| ☐ | 002SH15 | 16.5" | NC | ☐ | 002SH27 | 21.0" | NC |
| ☐ | 002SH16 | 17.0" | NC | ☐ | 002SH29 | 21.5" | NC |
| ☐ | 002SH17 | 17.5" | NC | ☐ | 002SH36 | 22.0" | NC |

### Caster Fork

*Please see matrix on Page 9 for additional information. Frog Legs not available with Integral caster housing*

| | | | | |
|---|---|---|---|---|
| ☐ | 002CF46 | | Multi Position Fork-Short | NC |
| ☐ | 002CF47 | | Multi Position Fork- Tall | NC |
| ☐ | 002CF62 | | 3" Fork | NC |
| ☐ | 002CF12 | | 5 1/4" Fork | NC |
| ☐ | 002CF17 | | 6 " Fork | NC |
| ☐ | 002CF23 | | 7" Fork | NC |
| ☐ | 002CF29 | | 8" x 2" Fork | NC |
| ☐ | 002CF65 | | Multiple Position<br>*Integral caster housing only* | NC |
| ☐ | 002CF69 | | Multiple Position Single Sided Fork<br>*Integral caster housing only* | $176.00 |
| ☐ | 002CF53 | | Frog Legs Suspension *(0-100 lbs)* | $574.00 |
| ☐ | 002CF54 | | Frog Legs Suspension *(101-190 lbs)* | $574.00 |
| ☐ | 002CF55 | | Frog Legs Suspension *(191-265 lbs)* | $574.00 |

### Caster Wheels

*See matrix on page 9.*

| | | | | |
|---|---|---|---|---|
| ☐ | 002CW1 | | 3" Micro | NC |
| ☐ | 002CW3 | | 4" Low Profile Polyurethane<br>*N/A w/ HD package* | NC |
| ☐ | 002CW31 | | 4" Micro Lighted | $110.00 |
| ☐ | 002CW72 | | 4" x 1" Aluminum Polyurethane | $73.00 |
| ☐ | 002CW44 | | 4" x 1.25" Semi Pneumatic | NC |
| ☐ | 002CW64 | | 4" x 1.5" Aluminum Soft Roll | $110.00 |
| ☐ | 002CW5 | | 5" Low Profile Polyurethane | NC |
| ☐ | 002CW51 | | 5" Micro Lighted | $110.00 |
| ☐ | 002CW6 | | 5" Soft Roll (Grey)<br>*N/A w/ Frog Legs* | $98.00 |
| ☐ | 002CW65 | | 5" x 1" Aluminum Polyurethane | $126.00 |
| ☐ | 002CW7 | | 5" x 1.5" Semi-Pneumatic | $110.00 |
| ☐ | 002CW66 | | 5" x 1.5" Aluminum Soft Roll | NC |
| ☐ | 002CW34 | | 6" Polyurethane | NC |
| ☐ | 002CW33 | | 6" Pneumatic | $110.00 |
| ☐ | 002CW35 | | 6" x 1.5" Semi Pneumatic | $110.00 |
| ☐ | 002CW68 | | 6" x 1.5" Aluminum Soft Roll | NC |
| ☐ | 002CW16 | | 7" Polyurethane | NC |
| ☐ | 002CW32 | | 8" Polyurethane | NC |
| ☐ | 002CW21 | | 8" Pneumatic | $146.00 |
| ☐ | 002CW39 | | 8" x 1.5" Semi Pneumatic | $146.00 |
| ☐ | 002CW36 | | 8" x 2" Pneumatic | $247.00 |
| ☐ | 002CW37 | | 8" x 2" Pneumatic w/Airless Insert | $393.00 |

### Caster Options

| | | | | |
|---|---|---|---|---|
| ☐ | 002OC1 | | Caster Pin Locks *(N/A w/8"x2")*<br>*NA w/ Xtender, Frog Legs or Transit* | $209.00 |

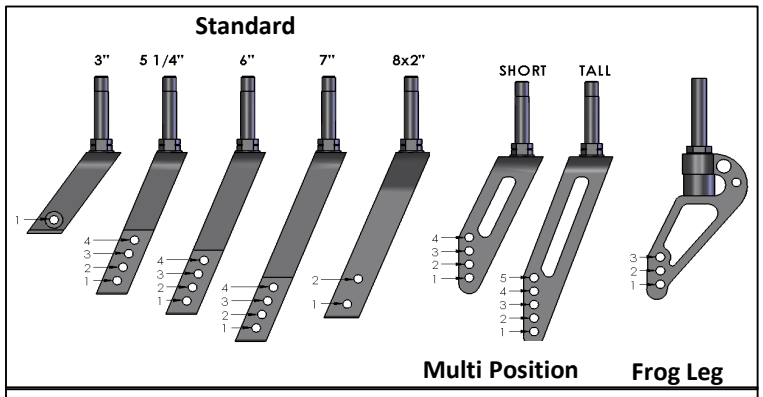


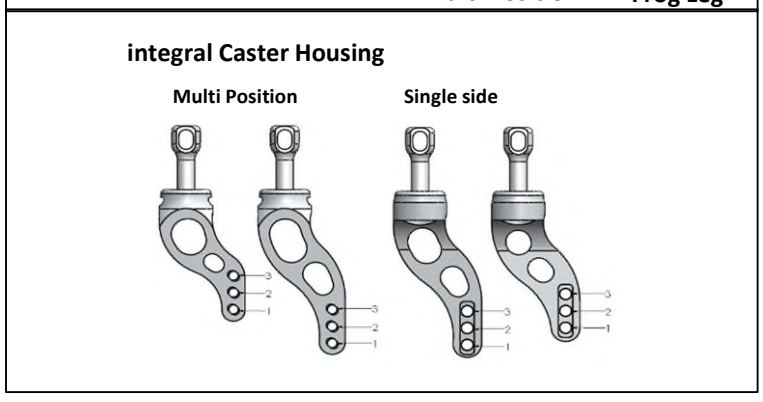


### Caster Housing

*Integral bearing forks only available with Integral caster housing*

| | | | | |
|---|---|---|---|---|
| ☐ | 002CP2 | | Standard | NC |
| ☐ | 002CP14 | | Integral Caster Housing<br>*N/A with caster Pin locks* | $110.00 |

| ✔ | Option # | Definition | Price | ✔ | Option # | Definition | Price |
|---|---|---|---|---|---|---|---|

## 4. REAR WHEELS / SEAT HEIGHT

### Rear Seat Height

| | | | | | | | |
|---|---|---|---|---|---|---|---|
| ☐ | 002RH11 | 13.0" | NC | ☐ | 002RH26 | 17.5" | NC |
| ☐ | 002RH12 | 13.5" | NC | ☐ | 002RH20 | 18.0" | NC |
| ☐ | 002RH13 | 14.0" | NC | ☐ | 002RH27 | 18.5" | NC |
| ☐ | 002RH14 | 14.5" | NC | ☐ | 002RH21 | 19.0" | NC |
| ☐ | 002RH15 | 15.0" | NC | ☐ | 002RH37 | 19.5" | NC |
| ☐ | 002RH16 | 15.5" | NC | ☐ | 002RH22 | 20.0" | NC |
| ☐ | 002RH17 | 16.0" | NC | ☐ | 002RH38 | 20.5" | NC |
| ☐ | 002RH18 | 16.5" | NC | ☐ | 002RH23 | 21.0" | NC |
| ☐ | 002RH19 | 17.0" | NC | ☐ | 002RH39 | 21.5" | NC |
| | | | | ☐ | 002RH40 | 22.0" | NC |

### Axle Plate

| | | | | |
|---|---|---|---|---|
| ☐ | 002AL102 | | Standard Adjustable (All in-one) | NC |
| ☐ | 002AL6 | | Amputee Adjustable<br>*N/A w/ Padded Armrest* | $146.00 |

### Axle

| | | | | |
|---|---|---|---|---|
| ☐ | 002AX1 | | Quick Release Steel | NC |
| ☐ | 002AX11 | | Quad Quick Release<br>*5 Spoke Mag & Mountain Wheel only* | $182.00 |

### One Arm Drive

*N/A w/ Xtender, 12", 23" & 24" wide, amputee axle plates, and small tray table. N/A w/ combination of Padded SA arms and Anti tips. Only available w/ 20", 22", 24" mag wheels.* ***Max weight capacity of 300 lbs. Only available in 6 spoke Mags***

| | | | | | | | |
|---|---|---|---|---|---|---|---|
| ☐ | 002AL16 | | | One Arm Drive Adj. Axle Plate | | | $1382.00 |
| | | ☐ | 002OA1 | Small Handrim (N/A w/ 20" wheels)<br>☐ RH position ☐ LH position | | | NC |
| | | ☐ | 002OA2 | Standard Handrim<br>☐ RH position ☐ LH position | | | NC |
| Select Wheel Size: | | ☐ | 20" | ☐ 22" | ☐ | 24" | |

### Xtender Power Assist

*RSH of 14.5"-20" for 22" rear wheels and RSH 15.5"-21" for 24" wheels. Front seat height must be greater than rear. N/A w/ Transit Option* ***Max weight capacity of 265 lbs.*** *Available 12"-22" widths.*

### Xtender Power Assist

| | | | | |
|---|---|---|---|---|
| ☐ | 002XT6 | | 22" Xtender Power Assist JWX-2<br>**NICKEL** | $9,996.00 |
| ☐ | 002XT7 | | 22" Xtender Power Assist JWX-2<br>**LITHIUM** | $11,604.00 |
| ☐ | 002XT4 | | 24" Xtender Power Assist JWX-2<br>**NICKEL** | $9,996.00 |
| ☐ | 002XT5 | | 24" Xtender Power Assist JWX-2<br>**LITHIUM** | $11,604.00 |

*Please select one of the following handrim options*

| | | | | |
|---|---|---|---|---|
| ☐ | 002XH5 | | Plastic Coated | NC |
| ☐ | 002XH6 | | Stainless Steel | NC |

### Xtender - Other Options

| | | | | |
|---|---|---|---|---|
| ☐ | 002XA10 | | Spare NiMH Power Pack - NICKEL | $1,925.00 |
| ☐ | 002XA11 | | Spare Li-ion Power Pack - LITHIUM | $2,479.00 |

### Xtender Wheel Options

| | | | | |
|---|---|---|---|---|
| ☐ | 002XA8 | | SPARE 22" Lite Spoke Pneu Alum | NC |
| ☐ | 002XA9 | | SPARE 22" Lite Spoke Pneu Plastic | $144.00 |
| ☐ | 002XA2 | | SPARE 24" Lite Spoke Pneu Alum | NC |
| ☐ | 002XA4 | | SPARE 24" Lite Spoke Pneu Plastic | $144.00 |

### Rear Wheel Type

*Not applicable w/ Xtender Power Assist Option. Ultra Lightweight Wheels only available w/ Alum Anodized Handrim. Handrims cannot be omitted on Lite Spoke Wheels.* Omit Rear wheel will default chair configuration set up to a 24" wheel*

| | | | | |
|---|---|---|---|---|
| ☐ | 002RW103 | | 20" Mag Wheel 5 Spoke | NC |
| ☐ | 002RW104 | | 22" Mag Wheel 5 Spoke | NC |
| ☐ | 002RW102 | | 24" Mag Wheel 5 Spoke | NC |
| ☐ | 002RW90 | | 20" Lite Spoke Wheel | $320.00 |
| ☐ | 002RW91 | | 22" Lite Spoke Wheel | $320.00 |
| ☐ | 002RW92 | | 24" Lite Spoke Wheel | NC |
| ☐ | 002RW93 | | 25" Lite Spoke Wheel | NC |
| ☐ | 002RW94 | | 26" Lite Spoke Wheel | $126.00 |
| ☐ | 002RW77 | | 22" Ultra Lightweight Spoke Wheel | $357.00 |
| ☐ | 002RW78 | | 24" Ultra Lightweight Spoke Wheel | $357.00 |
| ☐ | 002RW28 | | 22" Spinergy SPOX Black | $864.00 |
| ☐ | 002RW95 | | 24" Spinergy SPOX Black | $864.00 |
| ☐ | 002RW96 | | 25" Spinergy SPOX Black | $864.00 |
| ☐ | 002RW97 | | 26" Spinergy SPOX Black | $864.00 |
| ☐ | 002RW32 | | 22" Spinergy LX Black | $1,111.00 |
| ☐ | 002RW98 | | 24" Spinergy LX Black | $1,111.00 |
| ☐ | 002RW99 | | 25" Spinergy LX Black | $1,111.00 |
| ☐ | 002RW40 | | 26" Spinergy LX Black | $1,111.00 |
| ☐ | 002RW50 | | 24" Mountain | $393.00 |
| ☐ | 002RW25 | | Omit Rear Wheel and Axle * | NC |
| ☐ | 002RW49 | | Omit Rear Wheel (Use w/24" Xtender) | NC |
| ☐ | 002RW111 | | Omit Rear Wheel (Use w/22" Xtender) | NC |

### Rear Wheel Tire

| | | | | |
|---|---|---|---|---|
| ☐ | 002RT1 | | Pneumatic | $0.00 |
| ☐ | 002RT2 | | Pneumatic Airless Insert<br>*N/A with Xtender.* | $247.00 |
| ☐ | 002RT24 | | Pneumatic Airless Insert - Infinergy®<br>Lightweight - *E-TPU material* | $247.00 |
| ☐ | 002RT3 | | Full Poly | $0.00 |
| ☐ | 002RT38 | | SHOX Performance Poly | $146.00 |
| ☐ | 002RT25 | | Primo Orion Poly | $271.00 |
| ☐ | 002RT39 | | High-Pressure Clincher Black | $105.00 |
| ☐ | 002RT27 | | Knobby V-TRAK | $121.00 |
| ☐ | 002RT21 | | Schwalbe Marathon Plus Evolution | $157.00 |
| ☐ | 002RT12 | | Mountain Tire *Only available on 24" Mountain Rear Wheel* | NC |

| ✔ | Option # | Definition | Price | ✔ | Option # | Definition | Price |
|---|---|---|---|---|---|---|---|

## 4. REAR WHEELS / SEAT HEIGHT (CONT)

### Rear Seat Height Availability Matrices

*Rear tire, side frame, and axle plate selections dictate seat height availability. *Not all combinations are possible within acceptable seat height ranges*

| Rear Tire | Min RSH | Max RSH |
|---|---|---|
| 20" Pneumatic, Poly | 13" | 19.0" |
| 22" Pneumatic, Poly | 14.0" | 20.0" |
| 22" HP Clincher Blk | 13.5" | 19.5" |
| 22" Schwalbe | 13.5" | 19.5" |
| 24" Pneumatic, Poly | 15" | 21.0" |
| 24" HP Clincher Blk | 14.5" | 20.5" |
| 24" Knobby | 15" | 21.0" |
| 24" Schwalbe | 14.5" | 20.5" |
| 24" SHOX Poly | 14.5" | 20.5" |
| 24" Mountain | 15.0" | 21.0" |
| 25" HP Clincher Blk | 15.0" | 21.0" |
| 25" Schwalbe | 15.0" | 21.0" |
| 25" SHOX Poly | 14.5" | 20.5" |
| 26" Pneumatic | 16.0" | 22.0" |
| 26" HP Clincher Blk | 15.5" | 21.5" |
| 26" Schwalbe | 15.5" | 21.5" |

| Rear Side Frame | Min RSH | Max RSH |
|---|---|---|
| Curved | 13" | 21.0" |
| Straight | 13 | 22.0" |
| DAB | 13 | 22.0" |

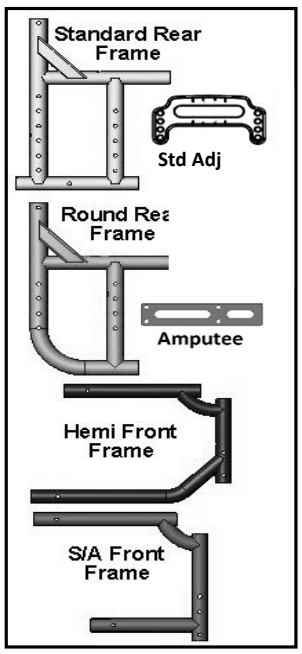


| Axle Plate | Min RSH | Max RSH |
|---|---|---|
| Std Adj *(All in one)* | 13" | 22.0" |
| Amputee | 14" | 22.0" |

| Wheel / Tire | 5 Spoke Mag | Mag | Lite Spoke | Ultra Lt wt | Spinergy |
|---|---|---|---|---|---|
| Pneumatic | 20,22,24 | 20,22,24 | 20,22,24,26 | | 24,26 |
| Pneumatic w/Airless Insert | 20,22,24 | 20,22,24 | 20,22,24,26 | | 24,26 |
| Full Poly Tire | 20,22,24 | 20,22,24 | 20,22,24 | | |
| High Pressure Clinch Blk | | | 22,24,26 | 22,24 | 22,24,26 |
| Knobby V-TRAK | | | 24 | | 24 |
| Schwalbe Marathon | | | 24,25,26 | 22,24 | 24,25,26 |
| SHOX Perform. Poly | 20,22,24 | | 24,25 | | 24,25 |
| 20"= 451 mm 22" = 501 mm 24" = 540 mm 25" = 559 26" = 590 | | | | | |

### Handrim

*Natural Fits available in 22", 24", and 25". Handrim selection N/A w/ Xtender. Ultra lightweight wheels only available w/ alum anodized handrim. Plastic coated limited to certain rims and sizes. Natural Fit w/ 5 spoke MAG only available in 24"*

| | | | |
|---|---|---|---|
| ☐ | 002HR1 | Aluminum Anodized | NC |
| ☐ | 002HR4 | Plastic Coated - *N/A on every rim* | $146.00 |
| ☐ | 002HR22 | Natural Fit - Standard Grip | $374.00 |
| ☐ | 002HR23 | Naural Fit - Super Grip | $434.00 |
| ☐ | 002HR28 | Q-Grip Neoprene Coated | $471.00 |
| ☐ | 002HR39 | Ellipse 3R | $550.00 |
| ☐ | 002HR40 | Carbolife - Gekko | $575.00 |
| ☐ | 002HR41 | Carbolife - Curve L Tetra Grip | $625.00 |
| ☐ | 002HR7 | Omit Handrim *Option may not be available on all wheels* | NC |
| ☐ | 002HR8 | 8 Oblique *N/A w/ Xtender. Only available with 24" or 26" 6 spokeMag or Lite Spoke rims.* | NC |

### Camber

| | | | |
|---|---|---|---|
| ☐ | 002CI1 | 0° | NC |
| ☐ | 00217CI | 2° *(default)* | NC |
| ☐ | 002CI3 | 4° | NC |

### Center of Gravity Preset

*Amputee Axle Plate will come preset at 1.0" Center of Gravity (CG), range of adjustment is -3.0" to -1.75" and 1.0" to 3.5" CG.*

| | | | |
|---|---|---|---|
| ☐ | 002CC2 | 1.0" *(default)* | NC |
| ☐ | 002CC3 | 1.5" | NC |
| ☐ | 002CC4 | 2.0" | NC |
| ☐ | 002CC5 | 2.5" | NC |
| ☐ | 002CC6 | 3.0" | NC |
| ☐ | 002CC7 | 3.5" | NC |

### One Arm Drive CG

| | | | |
|---|---|---|---|
| ☐ | 002CC30 | 1AD Forward position | NC |
| ☐ | 002CC31 | 1AD Reward position | NC |
| ☐ | 002CC32 | 1AD Center position | NC |

## 5. WHEEL LOCKS

### Wheel Lock

*Ergo & compact N/A w/ 13"-14" frame depth or amputee axle plate. Additional No Gos may exist depending on wheel size and position*

| | | | |
|---|---|---|---|
| ☐ | 002WL46 | High Mount Push | NC |
| ☐ | 002WL50 | High Mount Pull | NC |
| ☐ | 002WL75 | Ergo Scissor | $157.00 |
| ☐ | 002WL64 | Compact | $162.00 |
| ☐ | 002WL24 | Unilateral Wheel Lock Right | $320.00 |
| ☐ | 002WL23 | Unilateral Wheel Lock Left | $320.00 |
| ☐ | 002WL10 | Omit | NC |

### Wheel Lock Option

| | | | |
|---|---|---|---|
| ☐ | 002WL12 | Do Not Mount | NC |

### Extension Handle

*N/A w/ ergo scissor or compact wheel locks*

| | | | |
|---|---|---|---|
| ☐ | 002EH7 | Extension Handle (Pair) | $73.00 |

### Grade Aid

*Only available w/ high mount push or pull to lock wheel locks on pneumatic or pneumatic w/ airless tire options*

| | | | |
|---|---|---|---|
| ☐ | 002GA1 | Grade Aid | $157.00 |

| ✔ | Option # | | Definition | Price |
|---|---|---|---|---|

## 6. HANGER & FOOTREST

### Hangers

*Front mount hangers only available w/ aluminum angle adj footplates.*
*ALR/ELR Hangers N/A w/ Push To Lock wheel locks.*

| | | | | |
|---|---|---|---|---|
| ☐ | 002H145 | | 60° Swing In/Out Hanger | NC |
| ☐ | 002H139 | | 70° Swing In/Out Hanger | NC |
| ☐ | 002H141 | | 80° Swing In/Out Hanger | NC |
| ☐ | 002H154 | | 60° Swing In/Out Hanger Hemi | NC |
| ☐ | 002H155 | | 70° Swing In/Out Hanger Hemi | NC |
| ☐ | 002H140 | | 70° Swing In/Out Front Mount | NC |
| ☐ | 002H142 | | 80° Swing In/Out Front Mount | NC |
| ☐ | 002H158 | | 90° Swing In/Out Front Mount | NC |
| ☐ | 002H159 | | Articulating Hanger - Ext Mount *N/A w/ Platform Flip Up and Alum Angle Adj Front Mount footplates, 14"-22" width* | $526.00 |
| ☐ | 002H160 | | Elevating Hanger - Ext Mount *N/A w/ Platform Flip Up and Alum Angle Adj Front Mount footplates, 14"-22" width* | $339.00 |
| ☐ | 002H161 | | Elevating Hanger - Front Mount *Only available w/ front mount alum angle adj footplates and 14"-22" width* | $339.00 |
| ☐ | 002H32 | | Omit Hanger & Footplate | NC |

### Articulating / Elevating Hanger Cover

| | | | | |
|---|---|---|---|---|
| ☐ | 002DI47 | | Neoprene Cover | $325.00 |
| ☐ | 002DI48 | | Gel Pad Cover | $380.00 |

### Footplates

*Heel loop or leg strap not included, See Footplate Options Section*

| | | | | |
|---|---|---|---|---|
| ☐ | 002F1 | | Composite *(13"-22"w)* | NC |
| ☐ | 002F271 | | Composite Angle Adj-*(16"-22"w)* | $176.00 |
| ☐ | 002F3 | | Alum Angle Adj - Ext Mt *(12"-22"w)* | $176.00 |
| ☐ | 002F8 | | Alum Angle Adj - Front Mt*(12"-22"w)* | $176.00 |
| ☐ | 002F5 | | Alum Footplate - Fixed *(14"-22"w)* *Available w/ Ext Mount ELR or ALR* | NC |
| ☐ | 002F48 | | Platform Flip Up Angle Adj *(12"-22"w)* *N/A w/ Hemi Hangers,ELR/ALR,Front Mnt* | $230.00 |
| ☐ | 002F7 | | Omit Footplate & Ext Tube | NC |

### Footplate Options (Ext Tube & Front Mount)

| | | | | |
|---|---|---|---|---|
| ☐ | 002HL1 | | Heel Loop | NC |
| ☐ | 002HL5 | | Leg Strap | NC |

### Footrest Extension Tubes

*Required w/ extension tube mounted hangers. See leg length matrix*

| | | | | |
|---|---|---|---|---|
| ☐ | 002E61 | | Short Hemi | NC |
| ☐ | 002E1 | | Short | NC |
| ☐ | 002E2 | | Medium | NC |
| ☐ | 002E5 | | Long | NC |
| ☐ | 002E16 | | High Mount *N/A w/ one-arm drive option or ELR/ALR or 90° front mount. Only available w/angle adj footplates* | $97.00 |
| ☐ | 002E23 | | 2" - Front Mount Only *N/A w/ 6", 7" or 8" casters with 90°hangers, or ELR's* | $53.00 |
| ☐ | 002E24 | | 4" - Front Mount Only *N/A w/6", 7" or 8" casters w/ 90°hangers or ELR/ALR* | $53.00 |

### Lower Leg Length Setting (Extension Mount Only)

*Recommend 2" less than FSTFH. (*)denotes frame, 9" & 9.5" Hemi Only*

| | | | | | | | |
|---|---|---|---|---|---|---|---|
| ☐ | 002LO01 | 9.0"(*) | NC | ☐ | 002LO13 | 15.0" | NC |
| ☐ | 002LO02 | 9.5"(*) | NC | ☐ | 002LO14 | 15.5" | NC |
| ☐ | 002LO03 | 10.0" | NC | ☐ | 002LO15 | 16.0" | NC |
| ☐ | 002LO04 | 10.5" | NC | ☐ | 002LO16 | 16.5" | NC |
| ☐ | 002LO05 | 11.0" | NC | ☐ | 002LO17 | 17.0" | NC |
| ☐ | 002LO06 | 11.5" | NC | ☐ | 002LO18 | 17.5" | NC |
| ☐ | 002LO07 | 12.0" | NC | ☐ | 002LO19 | 18.0" | NC |
| ☐ | 002LO08 | 12.5" | NC | ☐ | 002LO20 | 18.5" | NC |
| ☐ | 002LO09 | 13.0" | NC | ☐ | 002LO21 | 19.0" | NC |
| ☐ | 002LO10 | 13.5" | NC | ☐ | 002LO22 | 19.5" | NC |
| ☐ | 002LO11 | 14.0" | NC | ☐ | 002LO23 | 20.0" | NC |
| ☐ | 002LO12 | 14.5" | NC | ☐ | 002LO24 | 20.5"*Std. Only* | NC |

### Z-finity Hangers/Footrest System

***(Maximum weight capacity for Z-Finity footrests is 165 lbs)***

*Some interference may exist in certain configurations. N/A with Heavy Duty*

| | | | | |
|---|---|---|---|---|
| ☐ | 002H162 | | Z-finity Hanger | NC |

### Z-finity Footrest Mount

| | | | | |
|---|---|---|---|---|
| ☐ | 002DI22 | | Direct Hanger Mt/Fixed Frame - High | NC |
| ☐ | 002DI23 | | Direct Hanger Mt/Fixed Frame - Low | NC |
| ☐ | 002DI24 | | Extension Tube Mount | NC |

### Z-finity Footrest Pivot Arm

| | | | | |
|---|---|---|---|---|
| ☐ | 002DI20 | | Short 2" | NC |
| ☐ | 002DI21 | | Long 3 1/4" | NC |

### Z-finity Footplate

*Some interference may exist in certain configurations.*

| | | | | |
|---|---|---|---|---|
| ☐ | 002F320 | | Multi Angle Adjustable *(Pair)* (not avail. w/8"-9" widths) | $247.00 |
| ☐ | 002F321 | | Angle Adjustable Platform Footboard | $247.00 |
| ☐ | 002F6 | | Omit Footplate | NC |

### Z-finity ExtensionTube Length *(When Choosing Ext. Tube Mount)*

| | | | | |
|---|---|---|---|---|
| ☐ | 002E62 | | Hemi Short | NC |
| ☐ | 002E1 | | Short | NC |
| ☐ | 002E2 | | Medium | NC |
| ☐ | 002E5 | | Long | NC |

| ✔ | Option # | | Definition | Price | ✔ | Option # | | Definition | Price |
|---|---|---|---|---|---|---|---|---|---|

## 7. BACKREST / SEATING

### Back Type

| | | | | | | | | | |
|---|---|---|---|---|---|---|---|---|---|
| ☐ | 002BT10 | | Standard *(see section A)* | NC | ☐ | 002BT22 | | Angle Adjustable Back *(5"-7" Pivot) (see section B)* | $357.00 |
| ☐ | 002BT20 | | Angle Adjustable Back *(3-5" Pivot) (see section B)* | $357.00 | ☐ | 002BT6 | | Depth Adjustable *(Required with DAB) (see section C)* | NC |

## SECTION A

### Back Height Setting

| | | | | | | | |
|---|---|---|---|---|---|---|---|
| ☐ | 002UX4 | 9" | NC | ☐ | 002UX16 | 15" | NC |
| ☐ | 002UX6 | 10" | NC | ☐ | 002UX18 | 16" | NC |
| ☐ | 002UX8 | 11" | NC | ☐ | 002UX20 | 17" | NC |
| ☐ | 002UX10 | 12" | NC | ☐ | 002UX22 | 18" | NC |
| ☐ | 002UX12 | 13" | NC | ☐ | 002UX24 | 19" | NC |
| ☐ | 002UX14 | 14" | NC | | | | |

### Back Height

| | | | | |
|---|---|---|---|---|
| ☐ | 002B1 | | Low (9"-12" *Std Back height range*) | NC |
| ☐ | 002B5 | | Medium (12"-15" *Std Back height range*) | NC |
| ☐ | 002B9 | | Tall (16"-19" *Std Back height range*) | NC |

### Back Post Options

*Omit push handles N/A w/ stabilizer bar. Folding HA push handle N/A w/8 deg or Low back height.*

**Standard Back type options:**

| | | | | |
|---|---|---|---|---|
| ☐ | 002BP1 | | Push Handle Straight | NC |
| ☐ | 002BP3 | | Push Handle 8° *Med or Tall only. N/A w/ Angle Adjustable Backrest* | NC |
| ☐ | 002BP2 | | Omit Push Handle Straight *(N/A w/HD)* | NC |
| ☐ | 002BP4 | | Omit Push Handle 8° *(N/A w/HD) Med or Tall only* | NC |
| ☐ | 002PH17 | | Folding Push Handle with Ht. Adj. Back *N/A w/Angle Adj Back & Heavy D* | $310.00 |

## SECTION B

### Angle Adjustable Backrest Pivot Height

*Standard push handles only. Some interference w/ Padded SA arms. N/A w/ flip-back or flip-back height adjustable armrests (classic).*

| | | | | |
|---|---|---|---|---|
| ☐ | 002AH1 | | Angle Adjustable Pivot 3" | NC |
| ☐ | 002AH2 | | Angle Adjustable Pivot 4" | NC |
| ☐ | 002AH3 | | Angle Adjustable Pivot 5" | NC |
| ☐ | 002AH4 | | Angle Adjustable Pivot 6" | NC |
| ☐ | 002AH5 | | Angle Adjustable Pivot 7" | NC |

### Preset Angle Adjustable Backrest (-15° to +3°) (Optional)

| | | | | |
|---|---|---|---|---|
| ☐ | 002BD5 | | Back Angle - 15° | NC |
| ☐ | 002BD4 | | Back Angle - 12° | NC |
| ☐ | 002BD3 | | Back Angle - 6° | NC |
| ☐ | 002BD2 | | Back Angle - 0° | NC |
| ☐ | 002BD1 | | Back Angle +3° | NC |

**Angle Adj Back type options:**

| | | | | |
|---|---|---|---|---|
| ☐ | 002BP5 | | Angle Adj. Straight Push Handles | NC |
| ☐ | 002BP6 | | Angle Adj. Omit Push Handles, *N/A w/HD* | NC |

*Circle the height setting in the below chart:*

**Angle Adjustable Backrest Chart**

| Back Tube Height | Low | Medium | Tall |
|---|---|---|---|
| Pivot Regular set at 3" | 12" 13" 14" | 15" 16" 17" | 17" 18" 19" |
| Pivot Regular set at 4" | 13" 14" 15" | 16" 17" 18" | 18" 19" 20" |
| Pivot Regular set at 5" | 14" 15" 16" | 17" 18" 19" | 19" 20" 21" |
| Pivot Tall set at 5" | 14" 15" 16" | 17" 18" 19" | 19" 20" 21" |
| Pivot Tall set at 6" | 15" 16" 17" | 18" 19" 20" | N/A |
| Pivot Tall set at 7" | 16" 17" 18" | 19" 20" 21" | N/A |
| Adjustable Pivot Point Measurement from Seat Sling | | | |
| If back height option is not chosen, middle option will be present | | | |

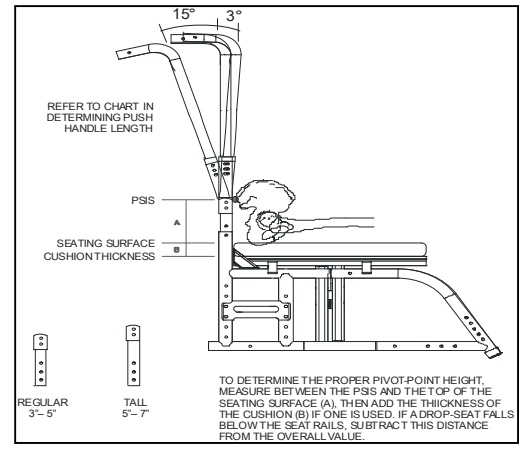


## SECTION C

### DAB Back Post Options

*Diagram of DAB in Appendix on page 9. SA Stroller Handle height range is 21.25"-28.5"*

| | | | | |
|---|---|---|---|---|
| ☐ | 002BP33 | | DAB - Swing Away Stroller Handles | $193.00 |
| ☐ | 002BP27 | | DAB - Post Standard (19") | NC |
| ☐ | 002BP28 | | DAB - Post Medium (22") | NC |
| ☐ | 002BP29 | | DAB - Post Tall (25") | NC |

### DAB Solid Backrest Height

| | | | | |
|---|---|---|---|---|
| ☐ | 002B66 | | Depth Adjustable 12" | NC |
| ☐ | 002B67 | | Depth Adjustable 14" | NC |
| ☐ | 002B68 | | Depth Adjustable 16" | NC |
| ☐ | 002B69 | | Depth Adjustable 18" | NC |
| ☐ | 002B70 | | Depth Adjustable 20" | NC |

### DAB Backrest Options

*DAB Solid Back NA w/23" & 24" frame widths*

| | | | | |
|---|---|---|---|---|
| ☐ | 002BU28 | | Omit DAB Solid Back and Hardware | NC |
| ☐ | 002BU29 | | Omit DAB Solid Back Include Hardware | $162.00 |
| ☐ | 002BU23 | | Depth Adjustable Solid Back | $188.00 |

### Back Type - Build 4 Me Options

*Must choose DAB Back type with B4ME options*

| | | | | |
|---|---|---|---|---|
| ☐ | 002BT127 | | B4ME - Dynamic Back | $1,558.00 |
| | | ☐ | Fixed Back post | NC |
| | | | ☐ Std *(19")* ☐ Med *(22")* ☐ Tall *(25")* | |
| | | ☐ | Height Adjustable Stroller handles | NC |
| | | | ☐ Std *(18"-23")* ☐ Tall *(19"-26")* | |
| ☐ | 002BT128 | | B4ME - Reclining Backrest ☐ Med *(19")* ☐ Tall *(22")* | $1,458.00 |

| ✔ | Option # | Definition | Price | ✔ | Option # | Definition | Price |
|---|---|---|---|---|---|---|---|

## 7. BACKREST / SEATING (cont)

## BACKREST UPHOLSTERY AND ACCESSORIES

### Backrest Upholstery (Standard or Angle Adjustable)

*Std EXO upholstery and Tension adj binding is always black.EXO Tension Adj Uph N/A with Heavy Duty. Max back height 20"for EXO.*

*Not available with DAB back type.*

| | | | | |
|---|---|---|---|---|
| ☐ | 002BU1 | | Standard Upholstery | $0.00 |
| ☐ | 002BU88 | | Standard Upholstery EXO | $75.00 |
| Color Binding: ☐ Silver ☐ Orange ☐ Red ☐ Blue | | | | |
| ☐ | 002BU70 | | Backrest Tension Adjust Ballistic **Reference 186BU70 for billing* | $190.00 |
| ☐ | 002BU89 | | Backrest Tension Adj EXO **Reference XXXBU89 for billing* | $449.00 |
| Color Binding: ☐ Silver ☐ Orange ☐ Red ☐ Blue | | | | |
| ☐ | 002BU71 | | Backrest Tension Adjust 3DX Vented **Reference 186BU71 for billing* | $471.00 |
| ☐ | 002BU82 | | Jay GO Backrest *N/A on Heavy Duty* | $598.00 |
| ☐ | 002BU14 | | Omit Back Upholstery | NC |

### Standard Backrest Option

| | | | | |
|---|---|---|---|---|
| ☐ | 002OD4 | | Reinforced Upholstery *Only avail w/ Std Back Upholstery. Std w/HD package* | $53.00 |

### Stabilizer Bar

*N/A with Folding Push Handle, or with Ht. Adj. Back or DAB Stroller handles*

| | | | | |
|---|---|---|---|---|
| ☐ | 002SZ1 | | Stabilizer Bar *Standard with HeavyDuty Package and Recline* | $168.00 |

### Military Service Patches (Optional)

*N/A with standard Upholstery*

| | | | | |
|---|---|---|---|---|
| ☐ | 002VU2 | | Army Patch | NC |
| ☐ | 002VU4 | | Air Force Patch | NC |
| ☐ | 002VU12 | | Coast Guard Patch | NC |
| ☐ | 002VU1 | | Marines Patch | NC |
| ☐ | 002VU3 | | Navy Patch | NC |
| ☐ | 002VU5 | | Purple Heart Patch | NC |
| ☐ | 002VU9 | | Purple Heart with Army Patch | NC |
| ☐ | 002VU11 | | Purple Heart with Air Force Patch | NC |
| ☐ | 002VU13 | | Purple Heart with Coast Guard Patch | NC |
| ☐ | 002VU8 | | Purple Heart with Marines Patch | NC |
| ☐ | 002VU10 | | Purple Heart with Navy Patch | NC |

### JAY Back (Optional)

| | | | | |
|---|---|---|---|---|
| ☐ | 002JB01 | | J3 Back *(See J3 Order Form)* | Price List |

### Stroller Handles (Removable Push Handles)

*Only available w/ omit push handles. N/A w/ DAB, amputee axle plate, push handles, or when angle adjustable back is selected, flip-back or flip-back height adjustable armrests, and JAY backs.*

| | | | | |
|---|---|---|---|---|
| ☐ | 002SR2 | | Regular Stroller Handles | $193.00 |
| ☐ | 002SR3 | | Tall Stroller Handles | $193.00 |

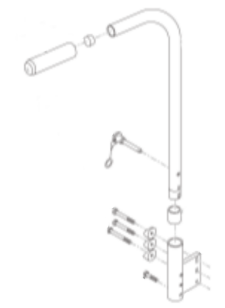

### NEW! Stroller Handle Extension - Removable

*Add the part number to your order corresponding to the chair width. Only available for widths 12-20". 7/8" to 1" tubing push cane conversion kit will be required except with DAB.*

| | | | | |
|---|---|---|---|---|
| ☐ | #842052 | | Stroller Extension Assembly 12" wide | $185.00 |
| ☐ | #842053 | | Stroller Extension Assembly 13" wide | $185.00 |
| ☐ | #842054 | | Stroller Extension Assembly 14" wide | $185.00 |
| ☐ | #842055 | | Stroller Extension Assembly 15" wide | $185.00 |
| ☐ | #842056 | | Stroller Extension Assembly 16" wide | $185.00 |
| ☐ | #842057 | | Stroller Extension Assembly 17" wide | $185.00 |
| ☐ | #842058 | | Stroller Extension Assembly 18" wide | $185.00 |
| ☐ | #842059 | | Stroller Extension Assembly 19" wide | $185.00 |
| ☐ | #842063 | | Stroller Extension Assembly 20" wide | $185.00 |
| ☐ | #125324 | | Push Handle Conversion Kit 7/8" to 1" | $146.00 |

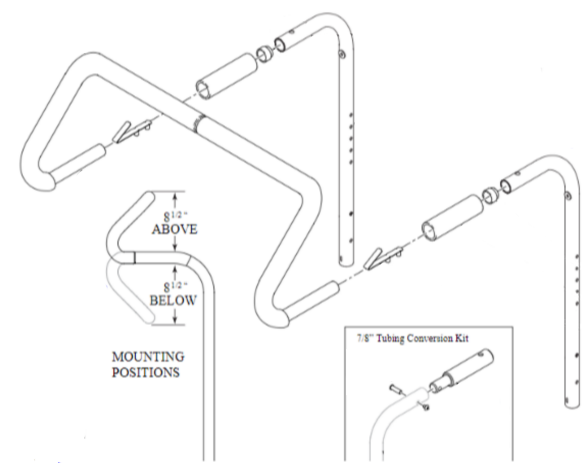

| ✔ | Option # | Definition | Price | ✔ | Option # | Definition | Price |
|---|---|---|---|---|---|---|---|

## 8. ARMREST / SIDE GUARDS

### Padded Swing Away

*N/A w/ DAB, Amputee axle. Some limitations may exist with integral push handles, some RSTFHs and wheel sizes. **Now available w/Transit.*

| | | | | |
|---|---|---|---|---|
| ☐ | 002AA18 | | Padded Swing-Away STD (9" to 13") | $278.00 |
| | | *Setting* | ☐ 9" ☐ 10" ☐ 11" ☐ 12" ☐ 13" | |

### Flip Back

*N/A w/ DAB, Xtender, 12" - 14" frame depth, Classic Style armpad in highest/lowest axle RSH on rounded rear frame, or angle adjustable back.4 Point (FS) J3 mounting bracket will cause interference with Flip Back Height Adj armrest. Flip back N/A with amputee axle plate for seat heights requiring the highest axle plate position*

| | | | | |
|---|---|---|---|---|
| ☐ | 002AA6 | | Flip Back Height Adj*(Classic 8.5"-13.5")* | $381.00 |
| ☐ | 002AA5 | | Flip Back *(incl. Desk Length Pad)* | $0.00 |
| ☐ | 002AA65 | | Flip Back Height Adj *(LITE 8.5"-13.5")* | $381.00 |

### Flip Up (For use with Depth Adjustable Back)

*Requires an Armpad or Foam from the Arm Pad section below*

| | | | | |
|---|---|---|---|---|
| ☐ | 002AA7 | | Length Adjustable Locking Flip-up | $339.00 |
| ☐ | 002AA1 | | Adj. Locking Flip-up *(Std. w/ foam)* | $339.00 |

### Height Adjustable

| | | | | |
|---|---|---|---|---|
| ☐ | 002AA11 | | Single Post Hgt. Adj. Std (8.5"-13.5") | $339.00 |
| ☐ | 002AA29 | | Single Post Hgt. Adj. Low (7"-11") | $339.00 |

### Omit Armrest

| | | | | |
|---|---|---|---|---|
| ☐ | 002AA14 | | Omit Armrest | NC |

### Armpad for Height Adjustable

*Ergo armpad only available with Single post Height adj & Flip back armrest*

*Ergo not available with Classic Flip Back armrest*

| | | | | |
|---|---|---|---|---|
| ☐ | 002AM23 | | Desk Length - Classic (10") | NC |
| ☐ | 002AM24 | | Full Length - Classic (14") | NC |
| ☐ | 002AM9 | | Armpad Foam - Short *(Flip Up armrests)* | NC |
| ☐ | 002AM10 | | Armpad Foam - Long *(Flip Up armrests)* | NC |
| ☐ | 002AM27 | | Ergo Pad (9.5"-13.5") | NC |

### Side Guard

*Plastic side guards N/A w/ height adj. arms. Side guard interference w/ Padded SA arms at some heights may exist.*

| | | | | |
|---|---|---|---|---|
| ☐ | 002SG33 | | Plastic Standard (8.5" High) | $188.00 |
| ☐ | 002SG29 | | Plastic Low (6.5" High) | $188.00 |

## 9. KEY OPTIONS & ACCESSORIES

### Anti-Tip

| | | | | |
|---|---|---|---|---|
| ☐ | 002AT1 | | Rear Anti-Tip *(NC w/ Xtender)* | $121.00 |

### Backpack

| | | | | |
|---|---|---|---|---|
| ☐ | 002A1 | | Quickie Backpack Black | $112.00 |
| ☐ | 002A2 | | Quickie Kids Backpack Black | $105.00 |

### Seat Pouch

| | | | | |
|---|---|---|---|---|
| ☐ | 0021A01 | | Seat Pouch Black /Charcoal | $83.00 |

### JAY Positioning

| | | | | |
|---|---|---|---|---|
| ☐ | 002K1 | | JAY Lower Extremity S/A support<br>☐ Left ☐ Right Position | $495 |
| ☐ | 002K2 | | Omit Hanger<br>☐ Left ☐ Right | NC |
| ☐ | 002K7 | | Pad Size<br>☐ 6" x 8" ☐ 8" x 10" | NC |

### Additional Cover & Pack Accessories

| | | | | |
|---|---|---|---|---|
| ☐ | 0028A02 | | Gel Cover Hanger/Frame | $162.00 |
| ☐ | 0028A01 | | Gel Cover Swing Away Arm | $162.00 |

### Positioning Belts

| | | | | |
|---|---|---|---|---|
| ☐ | 002A141 | | Belt 1.5" Auto Buckle w/Clamps | $97.00 |
| ☐ | 002A117 | | Belt 2" Aircraft Buckle w/Clamps | $139.00 |
| ☐ | 002A118 | | Belt 2" Aircraft Buckle Pad w/Clamp | $204.00 |
| ☐ | 002A120 | | Positioning Belt Slide Clamps | $61.00 |

### Spoke Guards

*Only available w/Mountain, and Lite Spoke wheels,*

*Not available with 5 spoke MAG wheels or Projection handrims*

| | | | | |
|---|---|---|---|---|
| ☐ | 0024A02 | | Quickie Clear Spoke Guards | $157.00 |
| ☐ | 0024A01 | | Quickie Black Spoke Guards | $157.00 |

## 9. KEY OPTIONS & ACCESSORIES (cont)

### Tray Tables

| ✔ | Option # | | Definition | Price |
|---|---|---|---|---|
| ☐ | 002A30 | | Small (13"-14"W) | $381.00 |
| ☐ | 002A31 | | Medium (15"-17"W) | $381.00 |
| ☐ | 002A32 | | Large (18"-20"W) | $381.00 |
| ☐ | 002A33 | | X-Large (21"-22"W) | $381.00 |

### Miscellaneous

*O2 holder N/A with Xtender or 12" - 13" frame width. Crutch holder N/A with EXO Tension Adj upholstery and Omit push handle*

| ✔ | Option # | | Definition | Price |
|---|---|---|---|---|
| ☐ | 0028A03 | | Caddy *(N/A w/ front mount hangers)* | $89.00 |
| ☐ | 002A2100 | | Crutch Holder | $115.00 |
| ☐ | 002LS14 | | Extra Leg Strap Black | $37.00 |
| ☐ | 002IG2 | | Impact Guard Neoprene | $61.00 |
| ☐ | 002A73 | | IV Holder | $218.00 |
| ☐ | 002A145 | | O2 Holder | $428.00 |
| ☐ | 0028A21 | | Tool Kit | $43.00 |
| ☐ | 002A999 | | Quickie Water Bottle & Holder | $81.00 |

## 10. COLOR

### Standard Frame Colors

NEW!

| ✔ | Option # | | Definition | Price |
|---|---|---|---|---|
| ☐ | 002C211 | | Celestial Sapphire | NC |
| ☐ | 002C212 | | Desert Sage | NC |
| ☐ | 002C213 | | Desert Tan | NC |
| ☐ | 002C214 | | Gloss Black | NC |
| ☐ | 002C215 | | Matte Black | NC |
| ☐ | 002C216 | | Metallic Shadow | NC |
| ☐ | 002C217 | | Midnight Blue | NC |
| ☐ | 002C218 | | Mystic Purple | NC |
| ☐ | 002C219 | | Petal Pink | NC |
| ☐ | 002C220 | | Pink Power | NC |
| ☐ | 002C221 | | Red Pepper | NC |
| ☐ | 002C222 | | Royal Blue | NC |
| ☐ | 002C223 | | Salute Green | NC |
| ☐ | 002C224 | | Scarlet noir | NC |
| ☐ | 002C225 | | Silver Ore | NC |
| ☐ | 002C226 | | Solar Orange | NC |
| ☐ | 002C227 | | Starlight White | NC |
| ☐ | 002C228 | | Storm Gray | NC |
| ☐ | 002C229 | | Turbo Green | NC |
| ☐ | 002C230 | | Velocity Yellow | NC |

### Personalized Frame Color

| ✔ | Option # | | Definition | Price |
|---|---|---|---|---|
| ☐ | 002C112 | | Desert Camouflage | $368.00 |
| ☐ | 002C43 | | Mossy Oak Camouflage | $368.00 |
| ☐ | 002C42 | | Stars & Stripes | $368.00 |
| ☐ | 002C108 | | Zebra *(Choose base color) Std w/ Starlight White. NA w/ Gloss Black and Matte Black.* | $368.00 |

### Anodized Color Package

*Standard Axle plate, Multi Forks and Aluminum Soft Roll casters only. N/A with Frog Legs.*

| ✔ | Option # | | Definition | Price |
|---|---|---|---|---|
| ☐ | 002EB07 | | Black - *Caster only* | NC |
| ☐ | 002EB08 | | Blue | $212.00 |
| ☐ | 002EB13 | | Gold | $212.00 |
| ☐ | 002EB09 | | Lime Green | $212.00 |
| ☐ | 002EB10 | | Purple | $212.00 |
| ☐ | 002EB11 | | Red | $212.00 |
| ☐ | 002EB12 | | Ti Grey | $212.00 |

### Additional Options Through Built for Me

*To inquire about any unique personalized Quickie products, contact: Phone: (800) 263 - 3390, Email cscanda@sunmed.com*

built4me

ON-CHAIR BUILD-READY SPECIALIZED UNIQUE

**Commonly Requested Options Include:**

- ✓ **Personalized Anodizing**
- ✓ **Xtender Battery on right side**
- ✓ **Dual Mount Wheel Locks - Attendant Foot Lock**
- ✓ **Hub Wheel Locks on Mag or Spoke Wheels**
- ✓ **Colored handrims**

STYLE YOUR RIDE b4me

## 11. APPENDIX

### Frame Depth matrix

| Frame Depth \ Seat Depth | 12" | 13" | 14" | 15" | 16" | 17" | 18" | 19" | 20" | 21" | 22" |
|---|---|---|---|---|---|---|---|---|---|---|---|
| 13" | S | S | | | | | | | | | |
| 14" | S | S | S | | | | | | | | |
| 15" | S | S | S | S | | | | | | | |
| 16" | | S | S | S | S | | | | | | |
| | | Hemi* | | | | | | | | | |
| 17" | | | S | S | S | S | | | | | |
| | | | Hemi* | | | | | | | | |
| 18" | | | | S | S | S | S | | | | |
| | | | | Hemi* | | | | | | | |
| 19" | | | | | S | S | S | S | | | |
| 20" | | | | | | S | S | S | S | | |
| | | | | | | Hemi* | | | | | |
| 21" | | | | | | | S | S | S | S | |
| | | | | | | | Hemi* | | | | |
| 22" | | | | | | | | S | S | S | S |
| | | | | | | | | Hemi* | | | |

"S" = Standard Frame Style
"H" = Hemi Frame Style
*Only (6) Frame Depths avail. on Hemi Style Frame

### Depth Adjusable Back Frame

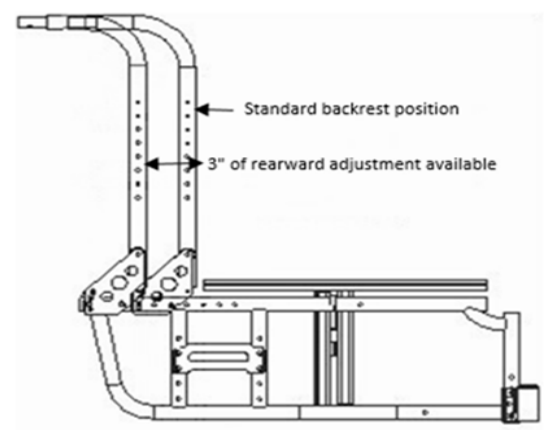


**Seat Depth and Frame Depth selections based on Standard Backrest position**

## 11. APPENDIX

### Lower Leg Length Matrix

*2" & 4" extensions for front mount hangers shipped separate, not mounted. Front seat height must be at least 2" taller than lower leg length on all swing in/out hangers. Front seat height must be at least 2" taller than maximum lower leg length on all front mount hangers. All values shown apply to Standard frame style, subtract 1.5" to get Hemi equivalent.More than 2" will require on field adjustment.*

| Hanger | Extension | Seat Sling to Top of Footrest in inches | | Min Allowable FSH |
|---|---|---|---|---|
| | | Min | Max | |
| 60° Hemi Swing In/Out | Short Hemi | 10 | 13 | 14 |
| | Short | - | - | - |
| | Med | 12.5 | 15.5 | 15.5 |
| | Long | 14.5 | 17.5 | 17.5 |
| 70° Hemi Swing In/Out | Short Hemi | 11 | 14 | 14 |
| | Short | - | - | - |
| | Med | 13.5 | 16.5 | 16 |
| | Long | 15.5 | 18.5 | 18 |
| 60° Swing In/Out | Short | 11.5 | 15 | 15 |
| | Med | 11.5 | 17 | 15 |
| | Long | 14 | 18.5 | 17 |
| 70° Swing In/Out | Short | 12 | 16.5 | 15 |
| | Med | 12.5 | 18.5 | 15.5 |
| | Long | 14.5 | 20.5 | 17.5 |
| 80° Swing In/Out | Short | 13.5 | 17 | 15.5 |
| | Med | 13.5 | 19 | 15.5 |
| | Long | 15.5 | 20.5 | 17.5 |
| 60° Swing In/Out w/Platform Flip Up | Short | 11.5 | 14.5 | 14 |
| | Long | 14 | 18.5 | 16 |
| 70° Swing In/Out w/Platform Flip Up | Short | 13 | 15.5 | 15 |
| | Long | 15.5 | 20 | 17.5 |
| 80° Swing In/Out w/Platform Flip Up | Short | 13.5 | 14.5 | 15.5 |
| | Long | 15 | 19 | 17 |
| 70° Front Mount | No Ext | 6 | 11.5 | 14 |
| | 2" | 6 | 14 | 16 |
| | 4" | 6 | 16 | 18 |
| 80° Front Mount | No Ext | 6 | 12 | 14 |
| | 2" | 6 | 14.5 | 16.5 |
| | 4" | 6 | 16.5 | 18.5 |
| 90° Front Mount | No Ext | 5.5 | 11.5 | 14 |
| ALR | Short | 15 | 16.5 | 17 |
| | Med | 15 | 18.5 | 17 |
| | Long | 16.5 | 20.5 | 18.5 |
| ELR Ext. Mount | Short | 12 | 16.5 | 15.5 |
| | Med | 12 | 18.5 | 15.5 |
| | Long | 13.5 | 20.5 | 17 |
| ELR Front Mount | No Ext | 5.5 | 9.5 | 13 |

### Bckrest Height Matrix

| Back Type | Ang-Adj Pivot Ht Setting | Push Handles | Backrest Height | Avail. Ht. Range |
|---|---|---|---|---|
| Standard - (Fixed) | N/A | Integral | Low | 9"-12" |
| | | | Medium | 12"-15" |
| | | | Tall | 16"-19" |
| | | Omit | Low | 9"-12" |
| | | | Medium | 12"-15" |
| | | | Tall | 16"-19" |
| Angle Adjustable (3"-5" Pivot) | 3" | Integral | Low | 12"-14" |
| | | | Medium | 15"-17" |
| | | | Tall | 17"-19" |
| | 4" | Integral | Low | 13"-15" |
| | | | Medium | 16"-18" |
| | | | Tall | 18"-20" |
| | 5" | Integral | Low | 14"-16" |
| | | | Medium | 17"-19" |
| | | | Tall | 19"-20" |
| | 3" | Omit | Low | 12"-14" |
| | | | Medium | 15"-17" |
| | | | Tall | 17"-19" |
| | 4" | Omit | Low | 13"-15" |
| | | | Medium | 16"-18" |
| | | | Tall | 18"-20" |
| | 5" | Omit | Low | 14"-16" |
| | | | Medium | 17"-19" |
| | | | Tall | 19"-20" |
| Angle Adjustable (5"-7" Pivot) | 5" | Integral | Low | 14"-16" |
| | | | Medium | 17"-19" |
| | | | Tall | 19"-20" |
| | 6" | Integral | Low | 15"-17" |
| | | | Medium | 18"-20" |
| | | | Tall | N/A |
| | 7" | Integral | Low | 16"-18" |
| | | | Medium | 18"-20" |
| | | | Tall | N/A |
| | 5" | Omit | Low | 14"-16" |
| | | | Medium | 17"-19" |
| | | | Tall | 19"-20" |
| | 6" | Omit | Low | 15"-17" |
| | | | Medium | 18"-20" |
| | | | Tall | N/A |
| | 7" | Omit | Low | 16"-18" |
| | | | Medium | 18"-20" |
| | | | Tall | N/A |
| Folding Push Handle - (Stroller Handle w/ Knuckle) | N/A | N/A | Low | 9"-12" |
| | | | Medium | 12"-15" |
| | | | Tall | 16"-19" |

| ✔ | Option # | Definition | Price | ✔ | Option # | Definition | Price |
|---|---|---|---|---|---|---|---|

## 11. APPENDIX

**Quickie 2 Seat To Floor Height Matrix - Standard Frame** **Hemi options will result in a reduction of approx 2 1/2"*

** Values Given are Estimates. Actual seat to floor height may vary based on seat depth and front seat to floor height selection.*

### All 3" Casters

| Fork Size | Stem Size | Bolt Position 5 | 4 | 3 | 2 | 1 |
|---|---|---|---|---|---|---|
| Multi Position Short | Std | - | - | - | 16.5 | 17.0 |
| | 1/2" | - | - | - | 17.0 | 17.5 |
| | 1" | - | - | - | 17.5 | 18.0 |
| | 1 1/2" | - | - | - | 18.0 | 18.5 |
| Multi Position Tall | Std | - | - | - | 18.5 | 19.0 |
| | 1/2" | - | - | - | 19.0 | 19.5 |
| | 1" | - | - | - | 19.5 | 20.0 |
| | 1 1/2" | - | - | - | 20.0 | 20.5 |
| 3" | Std | - | - | - | - | 15.0 |
| | 1/2" | - | - | - | - | 15.5 |
| | 1" | - | - | - | - | 16.0 |
| | 1 1/2" | - | - | - | - | 16.5 |
| 5 1/4" | Std | - | - | - | - | 17.5 |
| | 1/2" | - | - | - | - | 18.0 |
| | 1" | - | - | - | - | 18.5 |
| | 1 1/2" | - | - | - | - | 19.0 |
| 6" | Std | - | - | - | - | 18.0 |
| | 1/2" | - | - | - | - | 18.5 |
| | 1" | - | - | - | - | 19.0 |
| | 1 1/2" | - | - | - | - | 19.5 |
| 7" | Std | - | - | - | - | 19.0 |
| | 1/2" | - | - | - | - | 19.5 |
| | 1" | - | - | - | - | 20.0 |
| | 1 1/2" | - | - | - | - | 20.5 |
| 8" x 2" | Std | - | - | - | - | - |
| | 1/2" | - | - | - | - | - |
| | 1" | - | - | - | - | - |
| | 1 1/2" | - | - | - | - | - |
| Frog Legs | Std | - | - | - | 16.5 | 17.0 |
| | 1 1/2" | - | - | - | 18.0 | 18.5 |
| Integral Multi Pos Forks (Low) | Std | - | - | - | 15.5 | 16.0 |
| | 1/2" | - | - | - | 16.0 | 16.5 |
| | 1" | - | - | - | 16.5 | 17.0 |
| Integral Multi Pos Forks (Std) | Std | - | - | - | 16.5 | 17.0 |
| | 1/2" | - | - | - | 17.0 | 17.5 |
| | 1" | - | - | - | 17.5 | 18.0 |

### All 4" Casters

| Fork Size | Stem Size | Bolt Position 5 | 4 | 3 | 2 | 1 |
|---|---|---|---|---|---|---|
| Multi Position Short | Std | - | - | 16.5 | 17.0 | 17.5 |
| | 1/2" | - | - | - | 17.5 | 18.0 |
| | 1" | - | - | - | 18.0 | 18.5 |
| | 1 1/2" | - | - | - | 18.5 | 19.0 |
| Multi Position Tall | Std | - | - | 18.5 | 19.0 | 19.5 |
| | 1/2" | - | - | - | 19.5 | 20.0 |
| | 1" | - | - | - | 20.0 | 20.5 |
| | 1 1/2" | - | - | - | 20.5 | 21.0 |
| 3" | Std | - | - | - | - | - |
| | 1/2" | - | - | - | - | - |
| | 1" | - | - | - | - | - |
| | 1 1/2" | - | - | - | - | - |
| 5 1/4" | Std | - | - | 17.0 | 17.5 | 18.0 |
| | 1/2" | - | - | - | 18.0 | 18.5 |
| | 1" | - | - | - | 18.5 | 19.0 |
| | 1 1/2" | - | - | - | 19.0 | 19.5 |
| 6" | Std | - | - | 17.5 | 18.0 | 18.5 |
| | 1/2" | - | - | - | 18.5 | 19.0 |
| | 1" | - | - | - | 19.0 | 19.5 |
| | 1 1/2" | - | - | - | 19.5 | 20.0 |
| 7" | Std | - | - | 18.5 | 19.0 | 19.5 |
| | 1/2" | - | - | - | 19.5 | 20.0 |
| | 1" | - | - | - | 20.0 | 20.5 |
| | 1 1/2" | - | - | - | 20.5 | 21.0 |
| 8" x 2" | Std | - | - | - | - | - |
| | 1/2" | - | - | - | - | - |
| | 1" | - | - | - | - | - |
| | 1 1/2" | - | - | - | - | - |
| Frog Legs | Std | - | - | 16.5 | 17.0 | 17.5 |
| | 1 1/2" | - | - | 18.0 | 18.5 | 19.0 |
| Integral Multi Pos Forks (Low) | Std | - | - | - | 16.0 | 16.5 |
| | 1/2" | - | - | - | 16.5 | 17.0 |
| | 1" | - | - | - | 17.0 | 17.5 |
| Integral Multi Pos Forks (Std) | Std | - | - | 16.5 | 17.0 | 17.5 |
| | 1/2" | - | - | - | 17.5 | 18.0 |
| | 1" | - | - | - | 18.0 | 18.5 |

### All 5" Casters

| Fork Size | Stem Size | Bolt Position 5 | 4 | 3 | 2 | 1 |
|---|---|---|---|---|---|---|
| Multi Position Short | Std | - | 16.5 | 17.0 | 17.5 | 18.0 |
| | 1/2" | - | - | - | 18.0 | 18.5 |
| | 1" | - | - | - | 18.5 | 19.0 |
| | 1 1/2" | - | - | - | 19.0 | 19.5 |
| Multi Position Tall | Std | - | 18.5 | 19.0 | 19.5 | 20.0 |
| | 1/2" | - | - | - | 20.0 | 20.5 |
| | 1" | - | - | - | 20.5 | 21.0 |
| | 1 1/2" | - | - | - | 21.0 | 21.5 |
| 3" | Std | - | - | - | - | - |
| | 1/2" | - | - | - | - | - |
| | 1" | - | - | - | - | - |
| | 1 1/2" | - | - | - | - | - |
| 5 1/4" | Std | - | - | 17.5 | 18.0 | 18.5 |
| | 1/2" | - | - | - | 18.5 | 19.0 |
| | 1" | - | - | - | 19.0 | 19.5 |
| | 1 1/2" | - | - | - | 19.5 | 20.0 |
| 6" | Std | - | - | 18.0 | 18.5 | 19.0 |
| | 1/2" | - | - | - | 19.0 | 19.5 |
| | 1" | - | - | - | 19.5 | 20.0 |
| | 1 1/2" | - | - | - | 20.0 | 20.5 |
| 7" | Std | - | - | 19.0 | 19.5 | 20.0 |
| | 1/2" | - | - | - | 20.0 | 20.5 |
| | 1" | - | - | - | 20.5 | 21.0 |
| | 1 1/2" | - | - | - | 21.0 | 21.5 |
| 8" x 2" | Std | - | - | - | - | - |
| | 1/2" | - | - | - | - | - |
| | 1" | - | - | - | - | - |
| | 1 1/2" | - | - | - | - | - |
| Frog Legs | Std | - | - | - | 17.5 | 18.0 |
| | 1 1/2" | - | - | - | 19.0 | 19.5 |
| Integral Multi Pos Forks (Low) | Std | - | - | - | - | - |
| | 1/2" | - | - | - | - | - |
| | 1" | - | - | - | - | - |
| Integral Multi Pos Forks (Std) | Std | - | - | 17.0 | 17.5 | 18.0 |
| | 1/2" | - | - | - | 18.0 | 18.5 |
| | 1" | - | - | - | 18.5 | 19.0 |

### All 6" Casters

| Fork Size | Stem Size | Bolt Position 5 | 4 | 3 | 2 | 1 |
|---|---|---|---|---|---|---|
| Multi Position Short | Std | - | - | 17.5 | 18.0 | 18.5 |
| | 1/2" | - | - | - | 18.5 | 19.0 |
| | 1" | - | - | - | 19.0 | 19.5 |
| | 1 1/2" | - | - | - | 19.5 | 20.0 |
| Multi Position Tall | Std | 18.5 | 19.0 | 19.5 | 20.0 | 20.5 |
| | 1/2" | - | - | - | 20.5 | 21.0 |
| | 1" | - | - | - | 21.0 | 21.5 |
| | 1 1/2" | - | - | - | 21.5 | 22.0 |
| 3" | Std | - | - | - | - | - |
| | 1/2" | - | - | - | - | - |
| | 1" | - | - | - | - | - |
| | 1 1/2" | - | - | - | - | - |
| 5 1/4" | Std | - | - | 18.0 | 18.5 | 19.0 |
| | 1/2" | - | - | - | 19.0 | 19.5 |
| | 1" | - | - | - | 19.5 | 20.0 |
| | 1 1/2" | - | - | - | 20.0 | 20.5 |
| 6" | Std | - | 18.0 | 18.5 | 19.0 | 19.5 |
| | 1/2" | - | - | - | 19.5 | 20.0 |
| | 1" | - | - | - | 20.0 | 20.5 |
| | 1 1/2" | - | - | - | 20.5 | 21.0 |
| 7" | Std | - | 19.0 | 19.5 | 20.0 | 20.5 |
| | 1/2" | - | - | - | 20.5 | 21.0 |
| | 1" | - | - | - | 21.0 | 21.5 |
| | 1 1/2" | - | - | - | 21.5 | 22.0 |
| 8" x 2" | Std | - | - | - | - | - |
| | 1/2" | - | - | - | - | - |
| | 1" | - | - | - | - | - |
| | 1 1/2" | - | - | - | - | - |
| Frog Legs | Std | - | - | - | - | 18.5 |
| | 1 1/2" | - | - | - | - | 20.0 |
| Integral Multi Pos Forks (Low) | Std | - | - | - | - | - |
| | 1/2" | - | - | - | - | - |
| | 1" | - | - | - | - | - |
| Integral Multi Pos Forks (Std) | Std | - | - | - | 17.5 | 18.0 |
| | 1/2" | - | - | - | 18.0 | 18.5 |
| | 1" | - | - | - | 18.5 | 19.0 |

### All 7" Casters

| Fork Size | Stem Size | Bolt Position 5 | 4 | 3 | 2 | 1 |
|---|---|---|---|---|---|---|
| Multi Position Short | Std | - | - | - | - | 19.0 |
| | 1/2" | - | - | - | - | 19.5 |
| | 1" | - | - | - | - | 20.0 |
| | 1 1/2" | - | - | - | - | 20.5 |
| Multi Position Tall | Std | 19.0 | 19.5 | 20.0 | 20.5 | 21.0 |
| | 1/2" | - | - | - | 21.0 | 21.5 |
| | 1" | - | - | - | 21.5 | 22.0 |
| | 1 1/2" | - | - | - | 22.0 | - |
| 3" | Std | - | - | - | - | - |
| | 1/2" | - | - | - | - | - |
| | 1" | - | - | - | - | - |
| | 1 1/2" | - | - | - | - | - |
| 5 1/4" | Std | - | - | - | 19.0 | 19.5 |
| | 1/2" | - | - | - | 19.5 | 20.0 |
| | 1" | - | - | - | 20.0 | 20.5 |
| | 1 1/2" | - | - | - | 20.5 | 21.0 |
| 6" | Std | - | - | 19.0 | 19.5 | 20.0 |
| | 1/2" | - | - | - | 20.0 | 20.5 |
| | 1" | - | - | - | 20.5 | 21.0 |
| | 1 1/2" | - | - | - | 21.0 | 21.5 |
| 7" | Std | - | 19.5 | 20.0 | 20.5 | 21.0 |
| | 1/2" | - | - | - | 21.0 | 21.5 |
| | 1" | - | - | - | 21.5 | 22.0 |
| | 1 1/2" | - | - | - | 22.0 | - |
| 8" x 2" | Std | - | - | - | - | - |
| | 1/2" | - | - | - | - | - |
| | 1" | - | - | - | - | - |
| | 1 1/2" | - | - | - | - | - |
| Frog Legs | Std | - | - | - | - | - |
| | 1 1/2" | - | - | - | - | - |
| Integral Multi Pos Forks (Low) | Std | - | - | - | - | - |
| | 1/2" | - | - | - | - | - |
| | 1" | - | - | - | - | - |
| Integral Multi Pos Forks (Std) | Std | - | - | - | - | 19.0 |
| | 1/2" | - | - | - | - | 19.5 |
| | 1" | - | - | - | - | 20.0 |

### All 8" x 1.5" Casters

| Fork Size | Stem Size | Bolt Position 5 | 4 | 3 | 2 | 1 |
|---|---|---|---|---|---|---|
| Multi Position Short | Std | - | - | - | - | - |
| | 1/2" | - | - | - | - | - |
| | 1" | - | - | - | - | - |
| | 1 1/2" | - | - | - | - | - |
| Multi Position Tall | Std | - | - | - | - | - |
| | 1/2" | - | - | - | - | - |
| | 1" | - | - | - | - | - |
| | 1 1/2" | - | - | - | - | - |
| 3" | Std | - | - | - | - | - |
| | 1/2" | - | - | - | - | - |
| | 1" | - | - | - | - | - |
| | 1 1/2" | - | - | - | - | - |
| 5 1/4" | Std | - | - | - | 19.0 | 19.5 |
| | 1/2" | - | - | - | - | 20.0 |
| | 1" | - | - | - | - | 20.5 |
| | 1 1/2" | - | - | - | - | 21.0 |
| 6" | Std | - | - | 19.5 | 20.0 | 20.5 |
| | 1/2" | - | - | - | 20.5 | 21.0 |
| | 1" | - | - | - | 21.0 | 21.5 |
| | 1 1/2" | - | - | - | 21.5 | 22.0 |
| 7" | Std | - | 20.0 | 20.5 | 21.0 | 21.5 |
| | 1/2" | - | - | - | 21.5 | 22.0 |
| | 1" | - | - | - | 22.0 | - |
| | 1 1/2" | - | - | - | - | - |
| 8" x 2" | Std | - | - | - | - | - |
| | 1/2" | - | - | - | - | - |
| | 1" | - | - | - | - | - |
| | 1 1/2" | - | - | - | - | - |
| Frog Legs | Std | - | - | - | - | - |
| | 1 1/2" | - | - | - | - | - |
| Integral Multi Pos Forks (Low) | Std | - | - | - | - | - |
| | 1/2" | - | - | - | - | - |
| | 1" | - | - | - | - | - |
| Integral Multi Pos Forks (Std) | Std | - | - | - | - | - |
| | 1/2" | - | - | - | - | - |
| | 1" | - | - | - | - | - |

| ✔ | Option # | Definition | Price | ✔ | Option # | Definition | Price |
|---|---|---|---|---|---|---|---|

## 11. APPENDIX

**Quickie 2 Seat To Floor Height Matrix - Standard Frame** **Hemi options will result in a reduction of approx 2 1/2"*

** Values Given are Estimates. Actual seat to floor height may vary based on seat depth and front seat to floor height selection.*

### All 8" x 2" Casters

| Fork Size | Stem Size | Bolt Position 5 | 4 | 3 | 2 | 1 |
|---|---|---|---|---|---|---|
| Multi Position Short | Std | - | - | - | - | - |
| | 1/2" | - | - | - | - | - |
| | 1" | - | - | - | - | - |
| | 1 1/2" | - | - | - | - | - |
| Multi Position Tall | Std | - | - | - | - | - |
| | 1/2" | - | - | - | - | - |
| | 1" | - | - | - | - | - |
| | 1 1/2" | - | - | - | - | - |
| 3" | Std | - | - | - | - | - |
| | 1/2" | - | - | - | - | - |
| | 1" | - | - | - | - | - |
| | 1 1/2" | - | - | - | - | - |
| 5 1/4" | Std | - | - | - | - | - |
| | 1/2" | - | - | - | - | - |
| | 1" | - | - | - | - | - |
| | 1 1/2" | - | - | - | - | - |
| 6" | Std | - | - | - | - | - |
| | 1/2" | - | - | - | - | - |
| | 1" | - | - | - | - | - |
| | 1 1/2" | - | - | - | - | - |
| 7" | Std | - | - | - | - | - |
| | 1/2" | - | - | - | - | - |
| | 1" | - | - | - | - | - |
| | 1 1/2" | - | - | - | - | - |
| 8" x 2" | Std | - | - | - | 20.0 | 20.5 |
| | 1/2" | - | - | - | 20.5 | 21.0 |
| | 1" | - | - | - | 21.0 | 21.5 |
| | 1 1/2" | - | - | - | 21.5 | 22.0 |
| Frog Legs | Std | - | - | - | - | - |
| | 1 1/2" | - | - | - | - | - |
| Integral Multi Pos Forks (Low) | Std | - | - | - | - | - |
| | 1/2" | - | - | - | - | - |
| | 1" | - | - | - | - | - |
| Integral Multi Pos Forks (Std) | Std | - | - | - | - | - |
| | 1/2" | - | - | - | - | - |
| | 1" | - | - | - | - | - |

### All Other 8" Casters

| Fork Size | Stem Size | Bolt Position 5 | 4 | 3 | 2 | 1 |
|---|---|---|---|---|---|---|
| Multi Position Short | Std | - | - | - | - | - |
| | 1/2" | - | - | - | - | - |
| | 1" | - | - | - | - | - |
| | 1 1/2" | - | - | - | - | - |
| Multi Position Tall | Std | 19.5 | 20.0 | 20.5 | 21.0 | 21.5 |
| | 1/2" | - | - | - | 21.5 | 22.0 |
| | 1" | - | - | - | 22.0 | - |
| | 1 1/2" | - | - | - | - | - |
| 3" | Std | - | - | - | - | - |
| | 1/2" | - | - | - | - | - |
| | 1" | - | - | - | - | - |
| | 1 1/2" | - | - | - | - | - |
| 5 1/4" | Std | - | - | - | - | 20.0 |
| | 1/2" | - | - | - | - | 20.5 |
| | 1" | - | - | - | - | 21.0 |
| | 1 1/2" | - | - | - | - | 21.5 |
| 6" | Std | - | - | - | 20.0 | 20.5 |
| | 1/2" | - | - | - | 20.5 | 21.0 |
| | 1" | - | - | - | 21.0 | 21.5 |
| | 1 1/2" | - | - | - | 21.5 | 22.0 |
| 7" | Std | - | 20.0 | 20.5 | 21.0 | 21.5 |
| | 1/2" | - | - | - | 21.5 | 22.0 |
| | 1" | - | - | - | 22.0 | - |
| | 1 1/2" | - | - | - | - | - |
| 8" x 2" | Std | - | - | - | - | - |
| | 1/2" | - | - | - | - | - |
| | 1" | - | - | - | - | - |
| | 1 1/2" | - | - | - | - | - |
| Frog Legs | Std | - | - | - | - | - |
| | 1 1/2" | - | - | - | - | - |
| Integral Multi Pos Forks (Low) | Std | - | - | - | - | - |
| | 1/2" | - | - | - | - | - |
| | 1" | - | - | - | - | - |
| Integral Multi Pos Forks (Std) | Std | - | - | - | - | - |
| | 1/2" | - | - | - | - | - |
| | 1" | - | - | - | - | - |

**Sunrise Medical Canada Inc.**
**1000 Creditstone Road, Unit 2 • Concord, ON L4K 4P8 • Canada**