Quickie SR45™
May 2025
EIZ9

Mark For:

Date:
Dealer Acct #:
Dealer:
Dealer Contact:
Dealer Address:
Dealer City: Prov: PC:
Dealer Phone: ( ) Fax: ( )
Confirmation Email:
Confirm Via: ☐ Fax ☐ Email

Submitting for: ☐ **Quote** ☐ **Order**

PO#:

ADDITIONAL SHIPPING INFORMATION

Ship To:
Attention:
Address:
Address:
Ship To City: Prov PC:
Ship To Phone: ( ) Fax: ( )

✔	Option #	*Definition*	*Price*

✔	*Option #*	*Definition*	*Price*

1. FRAME

Base Model

☐	194WM77		Quickie SR45	$3,375.00

Power Tilt

☐	194PA53		Power Tilt *(W/ Attendant &Tilt Cntrl)* Tilt Control mounts to armrest ☐ Left ☐ Right (Rear Facing)	$3,279.00

Frame Options

☐	194FO3		Standard Base and Seat Frame *Maximum Weight: 265 lbs.*	NC

Transit

☐	194TO38		Transit Option	NC

Tilt Release

☐	194TT12		Backrest Dual Trigger Cable Release *(N/A w/ Power Tilt)*	NC
☐	194TT13		Foot Tilt Release - *Mounted on Right Side of frame (N/A w/ Power Tilt)*	$61.00

Tilt Angle

☐	194TA2		0° to 45°	NC

Quickie SR45 shown with the JAY© J3™ backrest and JAY© 3™ cushion.

Quickie SR45 features IRIS™ (Intelligent Rotation In-Space) technology.

✔	Option #		Definition	Price

2. SIZE / SEATING

Frame Width

☐	194W5		14"	NC
☐	194W6		15"	NC
☐	194W7		16"	NC
☐	194W8		17"	NC
☐	194W9		18"	NC
☐	194W10		19"	$308.00
☐	194W11		20"	$308.00

Seat Type

☐	194ST35		Standard Seat Pan	$176.00
☐	194ST7		Omit Seat Pan	NC

JAY Cushions (Optional)

To order any JAY cushions on-chair, please see the JAY price list.
Cushion name or part number must be filled out with desired width and depth

☐	194JC20	JAY Bundled Cushion		Price List
		Cushion Name or Part #		
		Width:	Depth:	

Frame Depth Set Up (Fill out either A or B)

A. Setup By QUICKIE

A. Desired Seat Depth

See **Figure 1** for pricing, **Figure 2**, Dimension A for measurement

☐	194SD7		14"	NC
☐	194SD8		15"	NC
☐	194SD9		16"	NC
☐	194SD10		17"	NC
☐	194SD11		18"	NC
☐	194SD12		19"	$308.00
☐	194SD13		20"	$308.00
☐	194SD14		21"	$308.00
☐	194SD33		22"	$308.00

A. User's Seated Height

See **Figure 2**, Dimension B. Distance from seat surface to top of the head.

☐	194SJ01		Less than 37"	NC
☐	194SJ02		37" or Greater	NC

OR

B. Setup By DEPTH

B. Frame Depth Range

☐	194FL91		Short Seat Frame 14"-18"	NC
☐	194FL92		Medium Seat Frame 16"-20"	NC
☐	194FL93		Long Seat Frame 18"-22"	NC

B. Frame Depth

☐	194FD5		14" *recommend short seat frame*	NC
☐	194FD6		15" *recommend short seat frame*	NC
☐	194FD7		16" *recommend short seat frame*	NC
☐	194FD8		17" *recommend short seat frame*	NC
☐	194FD9		18" *recommend medium seat frame*	NC
☐	194FD10		19" *recommend medium seat frame*	$308.00
☐	194FD11		20" *recommend long seat frame*	$308.00
☐	194FD16		21" *recommend long seat frame*	$308.00
☐	194FD17		22" *recommend long seat frame*	$308.00

A. Top of Cushion to Seat Rail

See **FIGURE 3** Dimensions A & B. This measurement is taken from the top of the cushion to the upper surface of the seat rail. If the cushion has a wedged shape and/or has significant lateral pelvic contour, then determine the height of the cushion at the point where the ischial tuberosities would contact (not immerse) the cushion surface.

☐	194CJ04		2 1/2" or Greater	NC
☐	194CJ05		Less than 2 1/2"	NC
☐	194CJ03		Below Seat Rail	NC

Figure 2

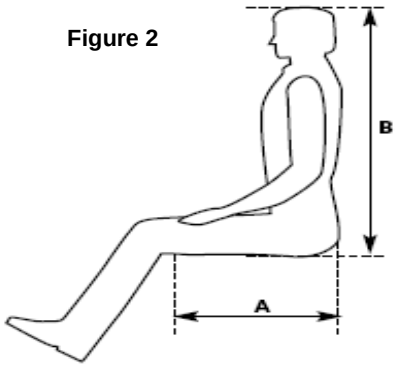

Figure 3

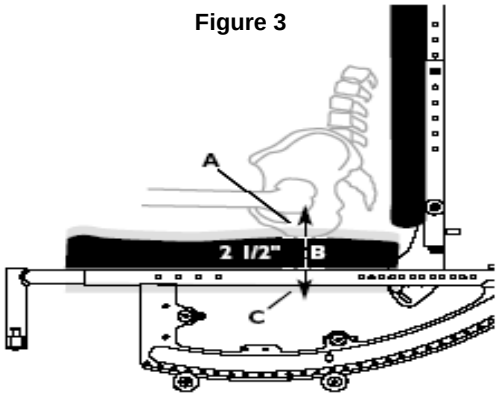

© 5/2025 MK-100025-CAN Rev 14

✔	Option #	Definition	Price	✔	Option #	Definition	Price

3. CASTERS / SEAT HEIGHT

Rear Wheel Size	CASTER SIZE					
	☐ 4	☐ 5	☐ 6	☐ 8x1	☐8x1.5	☐ 8x2
☐ 12"		☐ 16.0	☐ 16.0			
		☐ 16.5	☐ 16.5			
		☐ 17.0	☐ 17.0			
		☐ 17.5	☐ 17.5	☐ 17.5	☐ 17.5	☐ 17.5
☐ 12" Low Poly		☐ 15.0				
		☐ 15.5	☐ 16.0			
		☐ 16.0	☐ 16.5			
		☐ 16.5	☐ 17.0			
☐ 16"	☐ 14.0	☐ 15.0				
	☐ 15.0	☐ 17.0	☐ 17.0			
		☐ 17.5	☐ 17.5	☐ 17.5	☐ 17.5	☐ 17.5
		☐ 18.0	☐ 18.0	☐ 18.0	☐ 18.0	
		☐ 18.5	☐ 18.5	☐ 18.5	☐ 18.5	☐ 18.5
					☐ 19.0	
☐ 20"		☐ 16.0	☐ 16.0			
		☐ 16.5	☐ 16.5			
		☐ 17.0	☐ 17.0		☐ 17.5	
		☐ 17.5	☐ 17.5	☐ 19.5	☐ 20.0	☐ 17.5
			☐ 19.5	☐ 20.0	☐ 20.5	☐ 19.5
☐ 22"		☐ 16.5	☐ 16.5			
		☐ 17.0	☐ 17.0		☐ 17.5	
		☐ 17.5	☐ 17.5	☐ 17.5	☐ 18.0	☐ 17.5
		☐ 18.0	☐ 18.0	☐ 18.0	☐ 18.5	
☐ 24"		☐ 17.5	☐ 17.5	☐ 17.5	☐ 18.0	
		☐ 18.0	☐ 18.0	☐ 18.0	☐ 18.5	☐ 17.5
		☐ 18.5	☐ 18.5	☐ 18.5	☐ 19.0	☐ 18.5
		☐ 19.0	☐ 19.0	☐ 19.0	☐ 19.5	

Casters

☐	194CW73		4" x 1.25" Semi Pneumatic	NC
☐	194CW5		5" Low Profile Polyurethane	NC
☐	194CW7		5" X 1.5" Semi Pneumatic	$110.00
☐	194CW34		6" Polyurethane	NC
☐	194CW35		6"x 1.5" Semi Pneumatic	$110.00
☐	194CW32		8" Polyurethane	NC
☐	194CW39		8"x 1.5" Semi Pneumatic	$146.00
☐	194CW36		8"x 2" Pneumatic	$247.00
☐	194CW100		8"x 2" Pneumatic w/Insert	$393.00

4. REAR WHEELS / SEAT HEIGHT

Rear Wheel

☐	194RW13		12" Mag Wheel	NC
☐	194RW14		16" Mag Wheel	NC
☐	194RW3		20" Mag Wheel	NC
☐	194RW8		22" Mag Wheel	NC
☐	194RW1		24" Mag Wheel	NC

Rear Wheel Tire

☐	194RT3		Full Polyurethane *N/A with 12" and 16"*	NC
☐	194RT4		Low Polyurethane *Only available with 12" Mag Wheel*	NC
☐	194RT1		Pneumatic	NC
☐	194RT2		Pneumatic Airless Insert	$247.00

Handrim

12" and 16" wheels not available with handrims.

☐	194HR1		Aluminum Anodized	NC
☐	194HR4		Plastic Coated	$146.00
☐	194HR7		Omit Handrim	NC

Axle

☐	194AX1		Quick Release	NC
☐	194AX44		Threaded	NC

5. WHEEL LOCKS

Wheel Lock

☐	194WL8		Push To Lock	NC
☐	194WL43		Rear Foot Operated Wheel Lock	$89.00
☐	194WL10		Omit Wheel Lock	NC

Wheel Lock Extension Handle

Not available with rear foot operated wheel lock

☐	194EH7		Extension Handle (Pair)	$73.00

6. HANGER AND FOOTREST

Hanger

Front mount hangers only available w/ Alum angle adj footplates

✔	Option #		Definition	Price
☐	194H139		70° Swing In/Swing Out -Ext. Mount	NC
☐	194H140		70° Swing In/Swing Out -Front Mount	NC
☐	194H141		80° Swing In/Swing Out -Ext.Mount *N/A with all 8" casters*	NC
☐	194H142		80° Swing In/Swing Out -Front Mount	NC
☐	194H159		Articulating Hanger *N/A w/ Platform Flip Up and Alum Angle Adj Front Mount footplates.*	$526.00
☐	194H160		Elevating Hanger - Ext Mount *N/A w/ Platform Flip Up and Alum Angle Adj Front Mount footplates.*	$339.00
☐	194H161		Elevating Hanger - Front Mount *Only available w/ front mount alum angle adj footplates and 14"-22" width*	$339.00
☐	194H144		Omit Hanger	NC

Articulating / Elevating Hanger Cover

☐	194DI47		Neoprene Cover	$325.00
☐	194DI48		Gel Pad Cover	$380.00

Extension Tube (NA w/ Front Mount Hangers)

See lower leg length matrix

☐	194E1		Short (N/A with ELR)	NC
☐	194E2		Medium	NC
☐	194E5		Long	NC

Lower Leg Length Range Matrix

Extension Mount				
Hanger	Ext Tube	Footplate		
		Composite	Alum Angle Adj	Aluminum
70° Swing In/Out	Short	10.0" - 14.0"	10.2" - 14.1"	NA
	Medium	11.0" - 15.9"	11.1" - 16.0"	NA
	Long	12.9" - 17.8"	13.0" - 17.9"	NA
80° Swing In/Out	Short	9.9" - 11.0"	10.1" - 13.7"	NA
	Medium	11.0" - 15.5"	11.1" - 15.7"	NA
	Long	12.7" - 17.3"	12.9" - 17.4"	NA

All values are ± 0.25" and based on flat seat heights and do not account for the minimum 2" ground clearance or footplate thickness. Full range not available with all seat heights. ELR measurements taken with ELR fully

Front Mount Extension Tubes (NA w/ Extension Mount Hangers)

Optional, not required for Front Mount Hangers

☐	194E23		2"	$53.00
☐	194E24		4" *N/A w/14", 15" Seat To Floor Ht, N/A w/80° Hangers & 8" casters*	$53.00

Hanger Mount			
Ext	None	2"	4"
70°	3.1" - 8.8"	3.1" - 11.1"	3.1" - 13.0"
80°	3.3" - 9.2"	3.3" - 11.7"	3.3" - 13.7"
90°	2.7" - 8.7"	2.7" - 11.2"	2.7" - 13.2"

Hanger Mounts

Possible interference with 80° & 90° hangers

☐	194MZ02		Standard Hanger Mount	STD
☐	194MZ01		1" Offset Hanger Mount	NC

Footplates

Heel loop not included, see Footplate Options section below

☐	194F1		Composite	NC
☐	194F5		Aluminum *Only Avail w/ Elevating Legrest*	NC
☐	194F291		Aluminium Angle Adjustable	$176.00

Footplate Options

☐	194HL1		Heel Loops	NC
☐	1945A02		Toe Loops (pair) *Only Avail w/ Angle Adj. Footplate*	$43.00

Hanger	Extension	Seat Sling to Top of Footrest		Min Allowable FSH
		Min	Max	
ALR	Short	8 1/2	16	10 1/2
	Med	10	18	12
	Long	12	20	14
ELR Ext. Mount	Short	8	14 1/2	10
	Med	8	16 1/2	10
	Long	9 1/2	18 1/2	11 1/2
ELR Front Mount	No Ext (top hole)	3 1/2	7 1/2	5 1/2
	2" ext tube	7 1/4	10 1/4	9 1/4
	4" ext tube	9 1/4	12 1/4	11 1/4
	6" ext tube	11 1/4	14 1/4	13 1/4

7. BACKREST / SEATING

Backrest Type

☐	194BT3		Non Folding Backrest *N/A with Height Adjustable Back*	NC
☐	194BT99		Folding Backrest *N/A with Reclining Backrest*	$61.00

Backpost Style - Select only one option within A, B, or C

A. Stroller Handle Backpost (Fixed)

Folding Backrest adds 1" to the listed values.

☐	194BP48		Low (18")	NC
☐	194BP49		Medium (21")	NC
☐	194BP50		Tall (24")	NC

OR

B. Height Adjustable Back w/ Adj. Stroller Handles

☐	194BP51		Standard 15"-21"	NC
☐	194BP52		Tall 18"-24"	NC

OR

C. Reclining Backrest

Not available with 22" Deep Frame

☐	194BP53		Medium (21")	$1,570.00
☐	194BP54		Tall (24")	$1,570.00

Backrest Options

☐	194OD19		Removable Extension *N/A with Height adj. back with adjustable stroller handle.*	$176.00

JAY J3 Back

☐	194JB01		JAY J3 Back	See OF

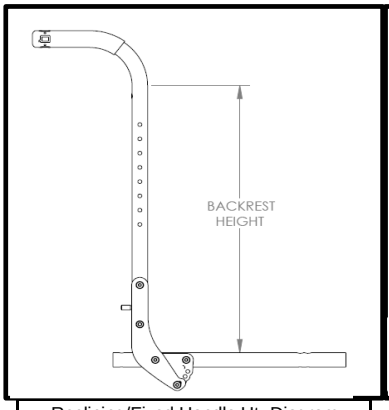

Reclining/Fixed Handle Ht. Diagram

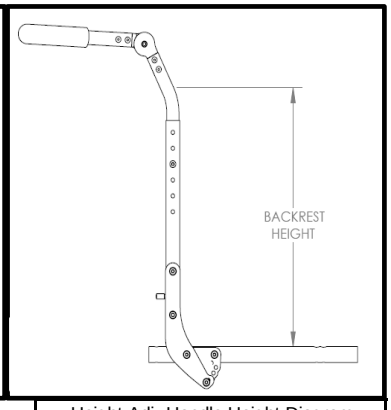

Height Adj. Handle Height Diagram

✔	Option #	Definition	Price	✔	Option #	Definition	Price

7. BACKREST / SEATING (CONT)

A. Backrest Position (set up by Quickie)

See **FIGURE 4** Dimension C. The location of the backrest surface in relation to the front of the backpost. The measurement is taken from the front surface of the backpost to the deepest area of the backrest in contact with the user's body.

☐	194BQ01		+3"	NC
☐	194BQ05		+2"	NC
☐	194BQ02		+1"	NC
☐	194BQ03		Flush	NC
☐	194BQ04		-1"	NC
☐	194BQ06		-2"	NC

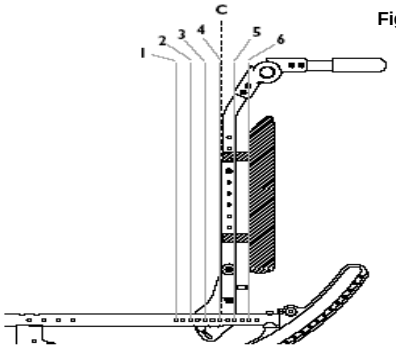

Figure 4

Back Type	
1	3" forward (+3")
2	2" forward (+2")
3	1" forward (+1")
4	Flush
5	1" rearward (-1")
6	2" rearward (-2")

8. ARMREST / SIDEGUARDS

Armrest

Armrests w/ Transfer Bar N/A w/ 14" Seat Depth

☐	194AA100		Dual Post Height Adj No Transfer Bar	$349.00
☐	194AA101		Dual Post Height Adj w/Transfer Bar	$362.00
☐	194AA102		Dual Post Flip Back Height Adj No Transfer Bar	$325.00
☐	194AA103		Dual Post Flip Back Height Adj w/Transfer Bar	$339.00
☐	194AA104		Single Post Height Adjustable - Std	$339.00
☐	194AA105		Single Post Height Adjustable - Low	$339.00
☐	194AA14		Omit Armrest	NC

Armrest Matrix for Single Post

Armrest Size	Transfer Tube Length D	Receiver	H Range	Pad Length L	
				Desk	Full
STD	8"	STD	10 3/4" to 15 3/4"	10 1/4"	14"
		LOW	8 3/4" to 13 3/4"		
LOW	5 1/4"	STD	9" to 13"		
		LOW	7 1/4" to 11 1/4"		

Armpad

☐	194AM25		Desk	NC
☐	194AM26		Full	NC

Armrest Receiver (Single Post Height Adjustable Only)

☐	194AR17		Low	NC
☐	194AR18		Std	NC

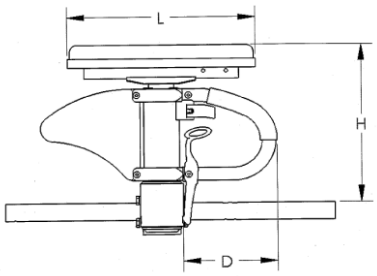

9. KEY OPTIONS AND ACCESSORIES

Anti Tips

☐	194AT1		Anti Tips (Pair)	$121.00

Positioning Belt

☐	194A141		1.5" Auto Buckle Universal w/Clamp	$97.00
☐	194A118		2" Aircraft Buckle Pad w/Clamp	$204.00
☐	194A120		Positioning Belt Clamps Only	$61.00

JAY Positioning

☐	194K1		JAY Lower Extremity S/A support ☐ Left ☐ Right Position	$320.00
☐	194K2		Omit Hanger ☐ Left ☐ Right	NC
☐	194K7		Pad Size ☐ 6" x 8" ☐ 8" x 10"	NC

Misc.

☐	194A1		Black Utility Backpack	$112.00
☐	194TS03		Tilt Stops	$37.00
☐	194A999		Quickie Water Bottle & Holder	$81.00

✔	Option #		Definition	Price

10. COLOR

Standard Frame Colors				
☐	194C211		Celestial Sapphire	NC
☐	194C212		Desert Sage	NC
☐	194C213		Desert Tan	NC
☐	194C214		Gloss Black	NC
☐	194C215		Matte Black	NC
☐	194C216		Metallic Shadow	NC
☐	194C217		Midnight Blue	NC
☐	194C218		Mystic Purple	NC
☐	194C219		Petal Pink	NC
☐	194C220		Pink Power	NC
☐	194C221		Red Pepper	NC
☐	194C222		Royal Blue	NC
☐	194C223		Salute Green	NC
☐	194C224		Scarlet Noir	NC
☐	194C225		Silver Ore	NC
☐	194C226		Solar Orange	NC
☐	194C227		Starlight White	NC
☐	194C228		Storm Gray	NC
☐	194C229		Turbo Green	NC
☐	194C230		Velocity Yellow	NC

✔	Option #		Definition	Price

Matte Frame Colors				
☐	194C116		Matte Black	NC
☐	194C151		Matte Black Cherry	NC
☐	194C150		Matte Electric Blue	NC
☐	194C149		Matte Evergreen	NC
☐	194C152		Matte Purple	NC

Personalized Frame Color				
☐	194C112		Desert Camouflage	$368.00
☐	194C43		Mossy Oak Camouflage	$368.00
☐	194C42		Stars & Stripes	$368.00
☐	194C108		Zebra *(Choose base color) N/A w/ Gloss Black or Matte Black.*	$368.00

Additional Options Through Built for Me

To inquire about any unique personalized Quickie products, contact:
Phone: (800) 263-3390, Email: cscanada@sunmed.com

built4me

✔	Option #	Definition	Price	✔	Option #	Definition	Price

JAY® Signature Series Backrest and Accessories

Note: Not all sizes and configurations shown below, for full offering visit www.sunrisemedical.ca

When ordering mark the part number desired and it will be added to the order as a separate line item .

JAY BACKREST

JAY J3 Posterior (PA) BACK - 2.2" Contour Depth

	Shell Height		Shell Width											
Mid Thoracic (MT)	12.0" (S)	J3PAMTSxxFS	☐ 12	$888	☐ 14	$888	☐ 16	$888	☐ 18	$888	☐ 20	$888
		J3PAMTSxxTH	☐ 12	$888	☐ 14	$888	☐ 16	$888	☐ 18	$888	☐ 20	$888
Upper Thoracic (UT)	16.5" (S)	J3PAUTSxxFS	☐ 12	$991	☐ 14	$991	☐ 16	$991	☐ 18	$991	☐ 20	$991
		J3PAUTSxxTH	☐ 12	$991	☐ 14	$991	☐ 16	$991	☐ 18	$991	☐ 20	$991
	18.0" (M)	J3PAUTMxxFS			☐ 14	$991	☐ 16	$991	☐ 18	$991	☐ 20	$991
		J3PAUTMxxTH			☐ 14	$991	☐ 16	$991	☐ 18	$991	☐ 20	$991
	19.5" (T)	J3PAUTTxxFS			☐ 14	$991	☐ 16	$991	☐ 18	$991	☐ 20	$991
		J3PAUTTxxTH			☐ 14	$991	☐ 16	$991	☐ 18	$991	☐ 20	$991
Shoulder Height (SH)	21.0" (S)	J3PASHSxxFS			☐ 14	$1,021	☐ 16	$1,021	☐ 18	$1,021	☐ 20	$1,021
		J3PASHSxxTH			☐ 14	$1,021	☐ 16	$1,021	☐ 18	$1,021	☐ 20	$1,021
	22.5" (M)	J3PASHMxxFS					☐ 16	$1,021	☐ 18	$1,021	☐ 20	$1,021
		J3PASHMxxTH					☐ 16	$1,021	☐ 18	$1,021	☐ 20	$1,021
	24.0" (T)	J3PASHTxxFS							☐ 18	$1,021	☐ 20	$1,021
		J3PASHTxxTH							☐ 18	$1,021	☐ 20	$1,021

FS Mounting Hardware

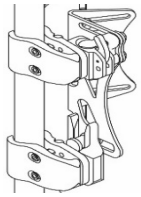

JAY J3 Posterior Lateral (PL) BACK - 3" Contour Depth

Mid Thoracic (MT)	15.0" (T)	J3PLMTTxxFS	☐ 12	$979	☐ 14	$979	☐ 16	$979	☐ 18	$979	☐ 20	$979
		J3PLMTTxxTH	☐ 12	$979	☐ 14	$979	☐ 16	$979	☐ 18	$979	☐ 20	$979
Upper Thoracic (UT)	16.5" (S)	J3PLUTSxxFS	☐ 12	$1,063	☐ 14	$1,063	☐ 16	$1,063	☐ 18	$1,063	☐ 20	$1,063
		J3PLUTSxxTH	☐ 12	$1,063	☐ 14	$1,063	☐ 16	$1,063	☐ 18	$1,063	☐ 20	$1,063
	18.0" (M)	J3PLUTMxxFS			☐ 14	$1,063	☐ 16	$1,063	☐ 18	$1,063	☐ 20	$1,063
		J3PLUTMxxTH			☐ 14	$1,063	☐ 16	$1,063	☐ 18	$1,063	☐ 20	$1,063
	19.5" (T)	J3PLUTTxxFS			☐ 14	$1,063	☐ 16	$1,063	☐ 18	$1,063	☐ 20	$1,063
		J3PLUTTxxTH			☐ 14	$1,063	☐ 16	$1,063	☐ 18	$1,063	☐ 20	$1,063
Shoulder Height (SH)	21.0" (S)	J3PLSHSxxFS			☐ 14	$1,092	☐ 16	$1,092	☐ 18	$1,092	☐ 20	$1,092
		J3PLSHSxxTH			☐ 14	$1,092	☐ 16	$1,092	☐ 18	$1,092	☐ 20	$1,092
	22.5" (M)	J3PLSHMxxFS					☐ 16	$1,092	☐ 18	$1,092	☐ 20	$1,092
		J3PLSHMxxTH					☐ 16	$1,092	☐ 18	$1,092	☐ 20	$1,092
	24.0" (T)	J3PLSHTxxFS							☐ 18	$1,092	☐ 20	$1,092
		J3PLSHTxxTH							☐ 18	$1,092	☐ 20	$1,092

TH Mounting Hardware

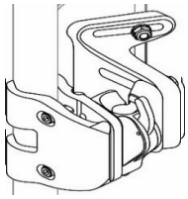

JAY J3 Posterior Deep (PD) BACK - 6" Contour Depth

Mid Thoracic (MT)	15.0" (T)	J3PDMTTxxFS	☐ 12	$1,073	☐ 14	$1,073	☐ 16	$1,073	☐ 18	$1,073	☐ 20	$1,073
		J3PDMTTxxTH	☐ 12	$1,073	☐ 14	$1,073	☐ 16	$1,073	☐ 18	$1,073	☐ 20	$1,073
Upper Thoracic (UT)	18.0" (M)	J3PDUTMxxFS			☐ 14	$1,161	☐ 16	$1,161	☐ 18	$1,161	☐ 20	$1,161
		J3PDUTMxxTH			☐ 14	$1,161	☐ 16	$1,161	☐ 18	$1,161	☐ 20	$1,161
Shoulder Height (SH)	21.0" (S)	J3PDSHSxxFS			☐ 14	$1,237	☐ 16	$1,237	☐ 18	$1,237	☐ 20	$1,237
		J3PDSHSxxTH			☐ 14	$1,237	☐ 16	$1,237	☐ 18	$1,237	☐ 20	$1,237

JAY J3 Back Whitmyer Headrest

AXYS Mount and Pad

☐	J3HEDX8		AXYS Headrest with 8" Plush Pad	$403.00
☐	J3HEDX10		AXYS Headrest with 10" Plush Pad	$403.00
☐	J3HEDX14		AXYS Headrest with 14" Plush Pad	$403.00
☐	J3HEDXAAPN		AXYS with Adj-a-Plush Narrow Pad	$551.00
☐	J3HEDXAAPS		AXYS with Adj-a-Plush Std Pad	$551.00

LINX Mount and Pad

☐	J3HEDL8		LINX Headrest with 8" Plush Pad	$528.00
☐	J3HEDL10		LINX Headrest with 10" Plush Pad	$528.00
☐	J3HEDL14		LINX Headrest with 14" Plush Pad	$528.00
☐	J3HEDLAAPN		LINX with Adj-a-Plush Narrow Pad	$508.00
☐	J3HEDLAAPS		LINX with Adj-a-Plush Std Pad	$508.00

JAY J3 Back Laterals *Swing Away Laterals With Pad - Pair*

☐	JLATSA44PR		SwingAway Lat with 4"x4" Pad (PR)	$668.00
☐	JLATSA45PR		SwingAway Lat with 4"x5" Pad (PR)	$668.00
☐	JLATSA46PR		SwingAway Lat with 4"x6" Pad (PR)	$668.00
☐	JLATSA64PR		SwingAway Lat with 6"x4" Pad (PR)	$668.00
☐	JLATSA65PR		SwingAway Lat with 6"x5" Pad (PR)	$668.00
☐	JLATSA66PR		SwingAway Lat with 6"x6" Pad (PR)	$668.00

JAY® Signature Series Cushions

Note: Not all sizes and configurations shown below, for full offering visit www.sunrisemedical.ca

When ordering mark the part number desired and it will be added to the order as a separate line item .

JAY CUSHIONS

JAY Fusion Cushion

✔	Option #		Definition	Price
☐	JFUSION1416		JAY Fusion 14" x 16"	$1,045.00
☐	JFUSION1616		JAY Fusion 16" x 16"	$1,045.00
☐	JFUSION1618		JAY Fusion 16" x 18"	$1,045.00
☐	JFUSION1620		JAY Fusion 16" x 20"	$1,045.00
☐	JFUSION1717		JAY Fusion 17" x 17"	$1,045.00
☐	JFUSION1816		JAY Fusion 18" x 16"	$1,045.00
☐	JFUSION1818		JAY Fusion 18" x 18"	$1,045.00
☐	JFUSION1820		JAY Fusion 18" x 20"	$1,045.00
☐	JFUSION2018		JAY Fusion 20" x 18"	$1,045.00
☐	JFUSION2020		JAY Fusion 20" x 20"	$1,045.00
☐	JFUSION2220		JAY Fusion 22" x 20"	$1,172.00

JAY Fusion Cushion w/ Single Valve Air Insert

✔	Option #		Definition	Price
☐	JFUSION1416AS		JAY Fusion 14" x 16"	$1,045.00
☐	JFUSION1616AS		JAY Fusion 16" x 16"	$1,045.00
☐	JFUSION1618AS		JAY Fusion 16" x 18"	$1,045.00
☐	JFUSION1620AS		JAY Fusion 16" x 20"	$1,045.00
☐	JFUSION1717AS		JAY Fusion 17" x 17"	$1,045.00
☐	JFUSION1816AS		JAY Fusion 18" x 16"	$1,045.00
☐	JFUSION1818AS		JAY Fusion 18" x 18"	$1,045.00
☐	JFUSION1820AS		JAY Fusion 18" x 20"	$1,045.00
☐	JFUSION2018AS		JAY Fusion 20" x 18"	$1,045.00
☐	JFUSION2020AS		JAY Fusion 20" x 20"	$1,045.00
☐	JFUSION2220AS		JAY Fusion 22" x 20"	$1,172.00

JAY Fusion Cushion w/ Dual Valve Air Insert

✔	Option #		Definition	Price
☐	JFUSION1416AD		JAY Fusion 14" x 16"	$1,063.00
☐	JFUSION1616AD		JAY Fusion 16" x 16"	$1,063.00
☐	JFUSION1618AD		JAY Fusion 16" x 18"	$1,063.00
☐	JFUSION1620AD		JAY Fusion 16" x 20"	$1,063.00
☐	JFUSION1717AD		JAY Fusion 17" x 17"	$1,063.00
☐	JFUSION1816AD		JAY Fusion 18" x 16"	$1,063.00
☐	JFUSION1818AD		JAY Fusion 18" x 18"	$1,063.00
☐	JFUSION1820AD		JAY Fusion 18" x 20"	$1,063.00
☐	JFUSION2018AD		JAY Fusion 20" x 18"	$1,063.00
☐	JFUSION2020AD		JAY Fusion 20" x 20"	$1,063.00
☐	JFUSION2220AD		JAY Fusion 22" x 20"	$1,191.00

JAY Union Cushion

✔	Option #		Definition	Price
☐	JU1416		JAY UNION 14" x 16"	$764.00
☐	JU1616		JAY UNION 16" x 16"	$764.00
☐	JU1618		JAY UNION 16" x 18"	$764.00
☐	JU1620		JAY UNION 16" x 20"	$764.00
☐	JU1717		JAY UNION 17" x 17"	$764.00
☐	JU1816		JAY UNION 18" x 16"	$764.00
☐	JU1818		JAY UNION 18" x 18"	$764.00
☐	JU1820		JAY UNION 18" x 20"	$806.00
☐	JU2018		JAY UNION 20" x 18"	$806.00
☐	JU2020		JAY UNION 20" x 20"	$806.00
☐	JU2220		JAY UNION 22" x 20"	$806.00

JAY J2 Cushion

✔	Option #		Definition	Price
☐	2108-MJ		JAY J2 14" x 16"	$832.00
☐	2105-MJ		JAY J2 15.5" x 16"	$832.00
☐	2106-MJ		JAY J2 15.5" x 18"	$832.00
☐	2107-MJ		JAY J2 15.5" x 20"	$958.00
☐	2117-MJ		JAY J2 17" x 17"	$832.00
☐	2100-MJ		JAY J2 18" x 16"	$832.00
☐	2101		JAY J2 18" x 18"	$832.00
☐	2103-MJ		JAY J2 18" x 20"	$958.00
☐	2118-MJ		JAY J2 20" x 18"	$941.00
☐	2102-MJ		JAY J2 20" x 20"	$1,112.00

JAY J2 Deep Contour Cushion

✔	Option #		Definition	Price
☐	2446		JAY J2 Deep Contour 14" x 16"	$870.00
☐	2466		JAY J2 Deep Contour 16" x 16"	$870.00
☐	2468		JAY J2 Deep Contour 16" x 18"	$870.00
☐	2460		JAY J2 Deep Contour 16" x 20"	$945.00
☐	2477		JAY J2 Deep Contour 17" x 17"	$870.00
☐	2486		JAY J2 Deep Contour 18" x 16"	$870.00
☐	2488		JAY J2 Deep Contour 18" x 18"	$870.00
☐	2480		JAY J2 Deep Contour 18" x 20"	$945.00
☐	2408		JAY J2 Deep Contour 20" x 18"	$945.00
☐	2400-MJ		JAY J2 Deep Contour 20" x 20"	$1,093.00
☐	2428		JAY J2 Deep Contour 22" x 18"	$1,093.00

JAY X2 Cushion

✔	Option #		Definition	Price
☐	JX21416		JAY X2 14" x 16"	$944.00
☐	JX21616		JAY X2 16" x 16"	$944.00
☐	JX21618		JAY X2 16" x 18"	$944.00
☐	JX21620		JAY X2 16" x 20"	$944.00
☐	JX21717		JAY X2 17" x 17"	$944.00
☐	JX21816		JAY X2 18" x 16"	$944.00
☐	JX21818		JAY X2 18" x 18"	$944.00
☐	JX21820		JAY X2 18" x 20"	$944.00
☐	JX22020		JAY X2 20" x 20"	$944.00

JAY Ion Cushion

✔	Option #		Definition	Price
☐	JION1416		JAY ION 14" x 16"	$657.00
☐	JION1616		JAY ION 16" x 16"	$657.00
☐	JION1618		JAY ION 16" x 18"	$657.00
☐	JION1620		JAY ION 16" x 20"	$657.00
☐	JION1717		JAY ION 17" x 17"	$657.00
☐	JION1816		JAY ION 18" x 16"	$657.00
☐	JION1818		JAY ION 18" x 18"	$657.00
☐	JION1820		JAY ION 18" x 20"	$657.00
☐	JION2018		JAY ION 20" x 18"	$698.00
☐	JION2020		JAY ION 20" x 20"	$698.00
☐	JION2220		JAY ION 22" x 20"	$698.00

JAY Union Reduced Profile Cushion

✔	Option #		Definition	Price
☐	JU1416RP		JAY Union RP 14" x 16"	$764.00
☐	JU1616RP		JAY Union RP 16" x 16"	$764.00
☐	JU1618RP		JAY Union RP 16" x 18"	$764.00
☐	JU1620RP		JAY Union RP 16" x 20"	$764.00
☐	JU1717RP		JAY Union RP 17" x 17"	$764.00
☐	JU1816RP		JAY Union RP 18" x 16"	$764.00
☐	JU1818RP		JAY Union RP 18" x 18"	$764.00
☐	JU1820RP		JAY Union RP 18" x 20"	$764.00
☐	JU2018RP		JAY Union RP 20" x 18"	$764.00
☐	JU2020RP		JAY Union RP 20" x 20"	$764.00

Sunrise Medical Canada Inc.
1000 Creditstone Road, Unit 2, Concord, ON L4K 4P8

Customer Service: 800-263-3390 Email: cscanada@sunmed.com www.sunrisemedical.ca
© 5/2025 MK-100025-CAN Rev 14